HYLIC®

HYLIC PUMP

Reliable Pumping Solutions for a Sustainable Future









Model HVT

Vertical Turbine Pump

Model : HVT

General introduction and application

HVT Type Long-axis Vertical Discharge Pump is mainly used for pumping sewage or waste water which are non corrosive, at the temperature lower than 60°C and of which suspended substances are free of fibers or abrasive particles, content is less than 150mg/L.

On the basis of HVT Type Long-axis Vertical Discharge Pumpo HVT type is additionally fitted with muff armor tubing with lubricant inside, serving for pumping of sewage or waste water, which are at the temperature lower than 60°C and contain certain solid particles, such as scrap iron, fine sand, coal powder, etc.

HVT Type Long-axis Vertical Discharge Pump is of wide applicability in the fields of public work, steel and iron metallurgy, chemistry, paper-making, tapping water service, power station and irrigation and water conservancy, etc.



HVT

Pump Nomenclature

300 HVT 2 - 40 - X - K

- K — Half-opening type impeller (omitted for enclosed type impeller)
- X — Discharge pipeline under the base (omitted for that above the base)
- 40 — Head of pump in meter
- 2 — Number of stages of pump (omitted for single stage)
- HVT — Long-axis vertical discharge pump (T denotes with muff armor tubing)
- 300 — Discharge bore of pump in mm

1600 HVT B - 15.5 (+4°)

- (+4°) — Mounting angle of vane
- 15.5 — Head of pump in m
- B — Half-adjustable vane (Q denotes full adjustable, B means semi-adjustable, omitted for non adjustable)
- HVT — Long-axis vertical discharge pump (T denotes with muff armor tubing)
- 1600 — Discharge bore of pump in mm

1800 HVT C - 28 A - X

- X — Discharge pipeline under the base (omitted for that above the base)
- A — The impeller cut initially (B, C, and D denote 2nd, 3rd, 4th cutting)
- 28 — Head of pump in m
- C — Draw-out type rotator (omitted for non draw-out type)
- HVT — Long-axis vertical discharge pump (with muff armor tubing)
- 1800 — Discharge bore of pump in mm

We reserve the right to modify specifcations without prior notice.

Model : HVT

Execute standards :

GB/T5657 technical conditions of centrifugal pump, category III;

GB/T13008 technical conditons of mixed flow pump, axial-flow pump.

Operational conditions :

1. The temperature of medium shall not be higher than 60°C.

2. The medium shall be neutral and PH value between 6.5-8.5. If the medium is not consistent to the requirements, specify in the order list.

3. For HVT type pump, the content of suspended substances in the medium shall be less than 150 mg/L; for HVT type pump, the max. Diameter of solid particles in the medium shall be less than 2 mm and the content less than 2 g/L.

4. HVT type pump shall be connected with clean water or soapy water outside to lubricate the rubber bearing. For twostage pump, lubricant pressure shall not be less than operational pressure.

5. The first stage impeller of pump shall be immersed in 0.5m above at min. water level and generally it is suggested to be within 2-3 m.

6. The wellbore shall be straight.

7. Specify the depth of well or under-liquid depth of pump in the order list.

8. Special operational condition is subject to agreement or technical agreement.

Performance range :

Flow	: 8 m^3/h - 60,000 m^3/h
Head	: 3m - 150m
Power	: 1.5 kW - 3,600 kW



Model : HVT

HVT type pump structure drawing

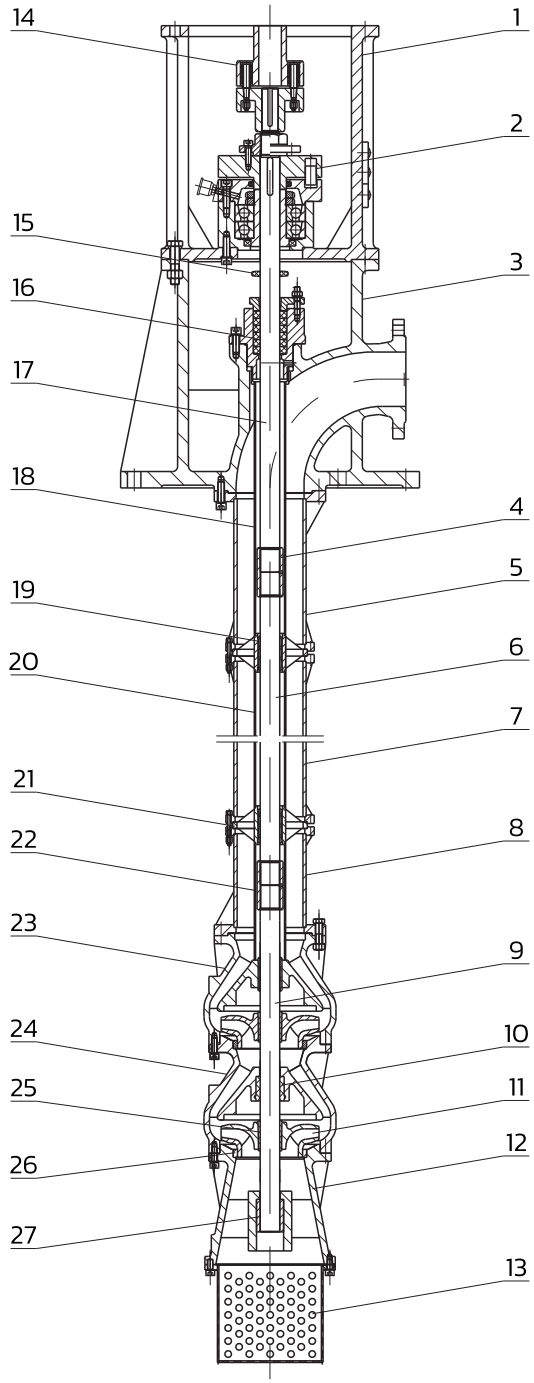

HVT Pump Structure Drawing
(for the outlet above the base)

Pump Structure (Part List)

1.	Motor base
2.	Anti-reverse device
3.	Outlet base
4.	Coupling
5.	Upper ascending pipe
6.	Transmissiion shaft
7.	Mid. Ascending pipe
8.	Lower ascending pipe
9.	Impeller shaft
10.	Mid. Rubber bearing
11.	Impeller
12.	Inlet base
13.	Strainer
14.	Flexible coupler
15.	Baffler
16.	Packing seal
17.	Motor shaft
18.	Upper armor tubing
19.	Bracket rubber bearing
20.	Mid. armor tubing
21.	Bracket
22.	Lower armor tubing
23.	Upper diversion body
24.	Diversion body
25.	Taper sleeve
26.	Seal ring
27.	Lower rubber bearing

Note: when equipped with YLB motor, both reversal resisting device and elastic clutch part will not be used.

We reserve the right to modify specifcations without prior notice.

Model : HVT

HVT type pump structure drawing

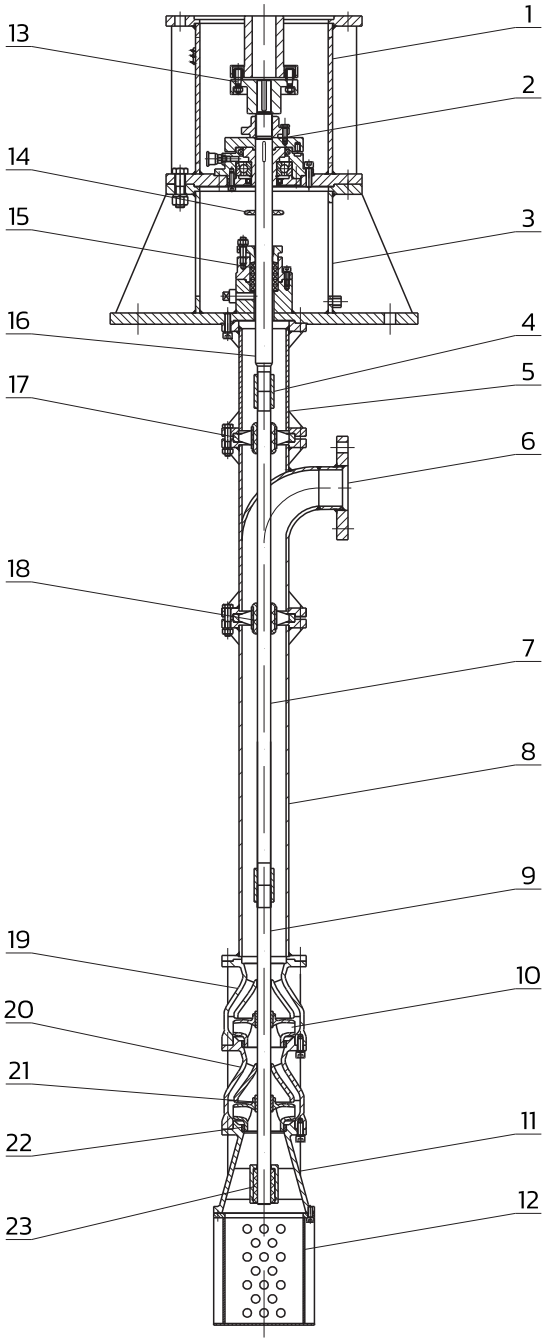

HVT Pump Structure Drawing
(for the outlet above the base)

Pump Structure (Part List)

1.	Motor base
2.	Anti-reverse device
3.	Joint base
4.	Coupling
5.	Upper ascending pipe
6.	Outlet base
7.	Transmissiion shaft
8.	Lower ascending pipe
9.	Impeller shaft
10.	Impeller
11.	Inlet base
12.	Strainer
13.	Flexible coupler
14.	Baffler
15.	Packing seal
16.	Motor shaft
17.	Bracket
18.	Bracket rubber bearing
19.	Upper diversion body
20.	Diversion body
21.	Taper sleeve
22.	Seal ring
23.	Lower rubber bearing

Note: when equipped with YLB motor, both reversal resisting device and elastic clutch part will not be used.

We reserve the right to modify specifcations without prior notice.

Model : HVT

HVTC type pump structure drawing

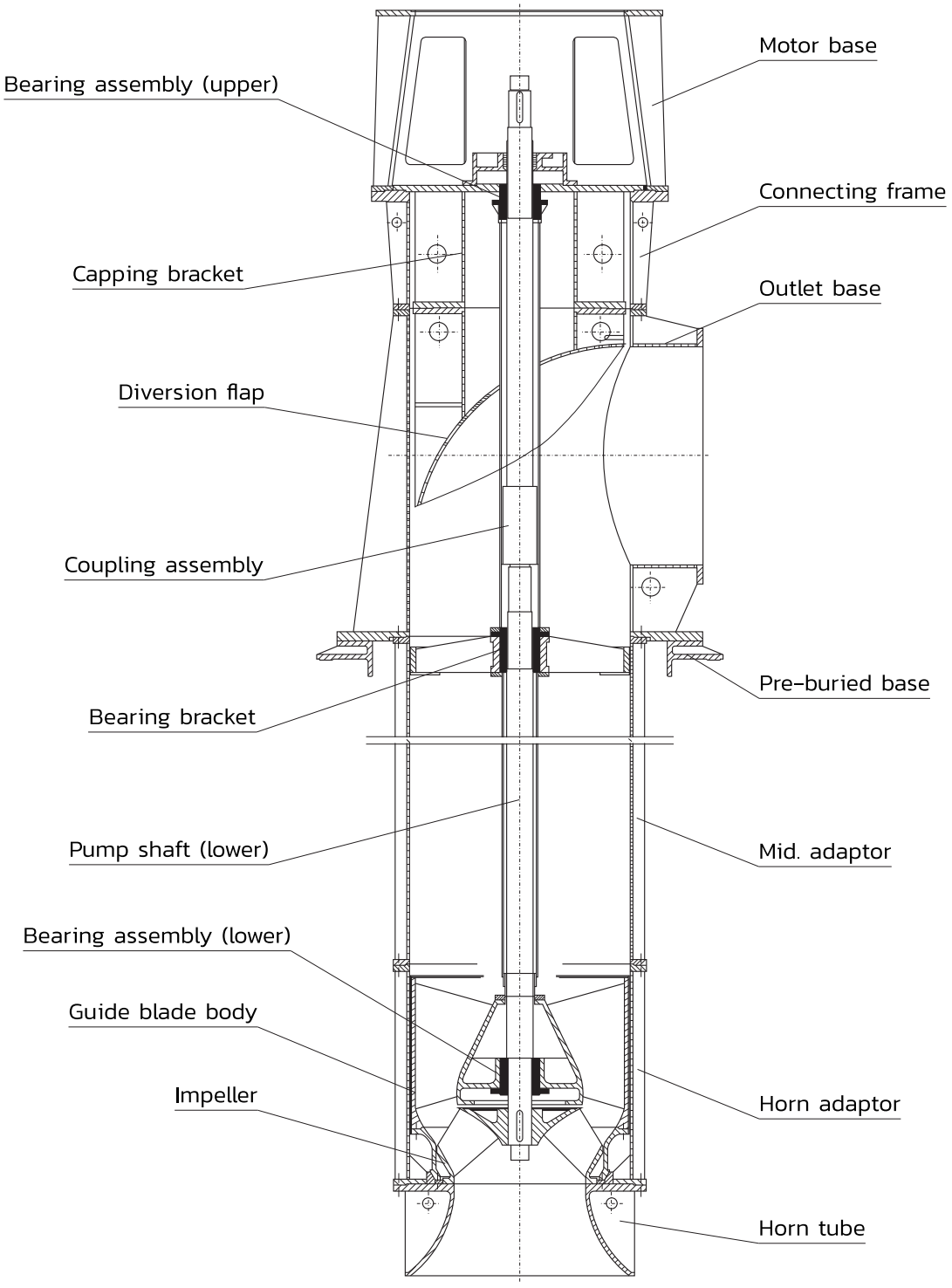

HVTC Type Pump Structure Drawing (loose core type structure)

HVT Outline Drawing & Dimensions
Model : HVT

Installation Dimension Diagram
(outlet diameter 50–400mm and outlet above the base)

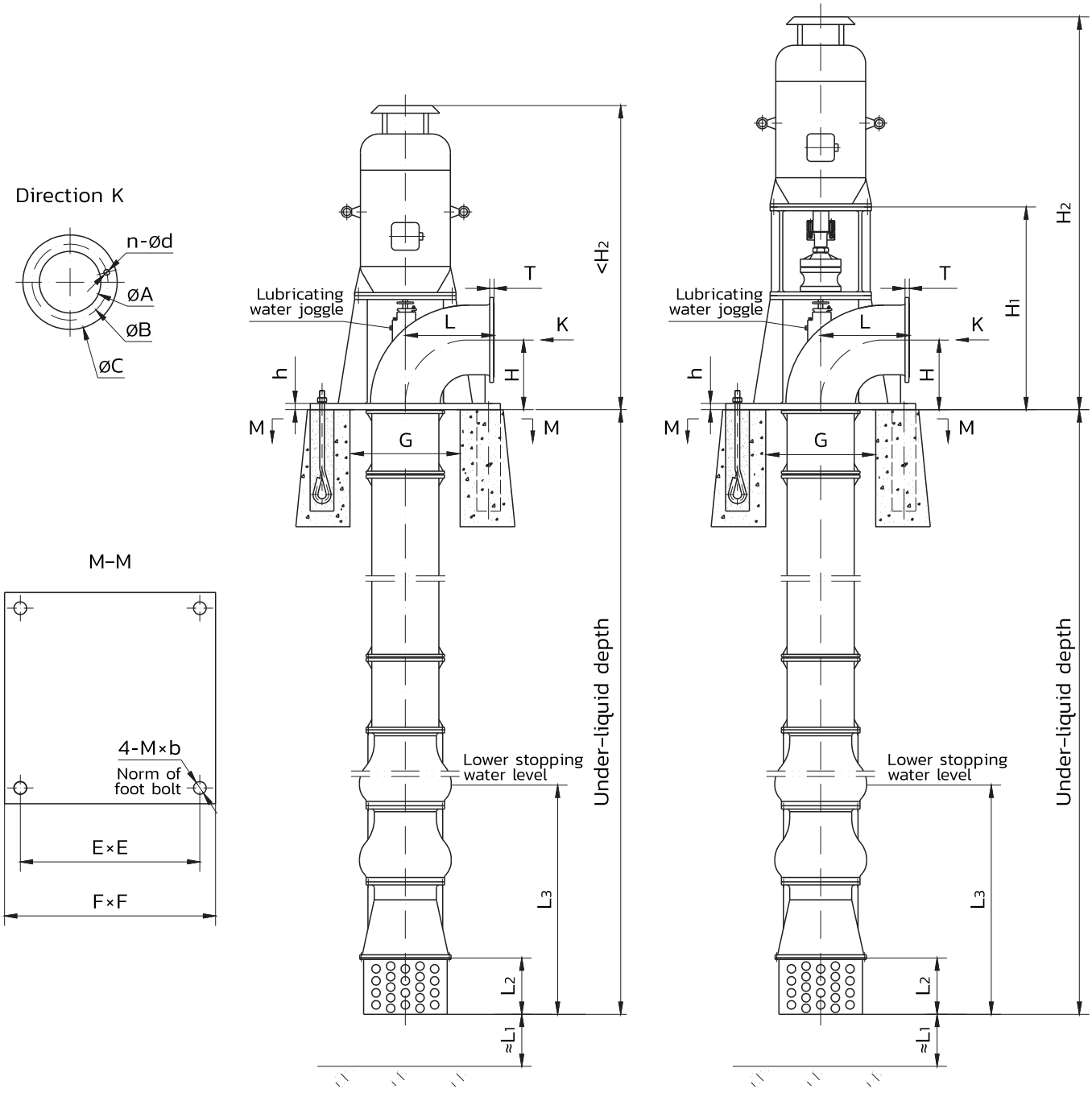

Note: the under-liquid depth is set by users

Fitted with YLB motor
(the axial force will be borne by the motor)

Fitted with Y series motor
(the axial force will be borne by the water pump)

We reserve the right to modify specifications without prior notice.

Installation Dimension Table (outlet diameter 50-400mm and outlet above the base)

No.	Pump type	Dimension																
		H	H_1	H_2	L	T	h	A	B	C	n-ød	E	F	M × b	G	L_1	L_2	L_3
1	50HVT-10	120	535	820	180	20	20	50	125	165	4-ø19	350	400	M16×300	280	300	200	500
2	50HVT2-20	120	520	888	180	20	20	50	125	165	4-ø19	350	400	M16×300	280	300	200	500
3	50HVT3-30	120	520	900	180	20	20	50	125	165	4-ø19	350	400	M16×300	280	300	200	500
4	50HVT4-40	120	535	970	180	20	20	50	125	165	4-ø19	350	400	M16×300	280	300	200	500
5	50HVT5-50	120	535	970	180	20	20	50	125	165	4-ø19	350	400	M16×300	280	300	200	500
6	50HVT6-60	120	570	1080	180	20	20	50	125	165	4-ø19	350	400	M16×300	280	300	200	500
7	50HVT7-70	120	570	1080	180	20	20	50	125	165	4-ø19	350	400	M16×300	280	300	200	500
8	50HVT8-80	120	570	1080	180	20	20	50	125	165	4-ø19	350	400	M16×300	280	300	200	500
9	50HVT9-90	120	570	1080	180	20	20	50	125	165	4-ø19	350	400	M16×300	280	300	200	500
10	50HVT10-100	120	570	1080	180	20	20	50	125	165	4-ø19	350	400	M16×300	280	300	200	500
11	65HVT-10	150	555	870	200	20	20	65	145	185	4-ø19	400	450	M20×400	300	300	200	550
12	65HVT2-20	150	540	910	200	20	20	65	145	185	4-ø19	400	450	M20×400	300	300	200	550
13	65HVT3-30	150	555	980	200	20	20	65	145	185	4-ø19	400	450	M20×400	300	300	200	550
14	65HVT4-40	150	590	1080	200	20	20	65	145	185	4-ø19	400	450	M20×400	300	300	200	550
15	65HVT5-50	150	590	1080	200	20	20	65	145	185	4-ø19	400	450	M20×400	300	300	200	550
16	65HVT6-60	150	590	1080	200	20	20	65	145	185	4-ø19	400	450	M20×400	300	300	200	550
17	65HVT7-70	150	590	1080	200	20	20	65	145	185	4-ø19	400	450	M20×400	300	300	200	550
18	65HVT8-80	150	590	1130	200	20	20	65	145	185	4-ø19	400	450	M20×400	300	300	200	550
19	65HVT9-90	150	590	1130	200	20	20	65	145	185	4-ø19	400	450	M20×400	300	300	200	550
20	65HVT10-100	150	590	1210	200	20	20	65	145	185	4-ø19	400	450	M20×400	300	300	200	550
21	80HVT-15	150	635	1060	200	22	25	80	160	200	8-ø19	450	500	M20×400	300	300	200	600
22	80HVT2-30	150	615	1140	200	22	25	80	160	200	8-ø19	450	500	M20×400	300	300	200	600
23	80HVT3-45	150	615	1140	200	22	25	80	160	200	8-ø19	450	500	M20×400	300	300	200	600
24	80HVT4-60	150	655	1275	200	22	25	80	160	200	8-ø19	450	500	M20×400	300	300	200	600
25	80HVT5-75	150	655	1435	200	22	25	80	160	200	8-ø19	450	500	M20×400	300	300	200	600
26	80HVT6-90	150	655	1435	200	22	25	80	160	200	8-ø19	450	500	M20×400	300	300	200	600
27	80HVT7-108	150	655	1435	200	22	25	80	160	200	8-ø19	450	500	M20×400	300	300	200	600
28	100HVT-15	200	870	1280	250	24	30	100	180	220	8-ø19	500	550	M20×400	350	300	300	750

HVT Outline Drawing & Dimensions
Model : HVT

We reserve the right to modify specifications without prior notice.

Installation Dimension Table (outlet diameter 50-400mm and outlet above the base)

No.	Pump type	Dimension																
		H	H_1	H_2	L	T	h	A	B	C	n-ød	E	F	M × b	G	L_1	L_2	L_3
29	100HVT-30	200	850	1470	250	24	30	100	180	220	8-ø19	500	550	M20×400	350	300	300	750
30	100HVT2-60	200	870	1610	250	24	30	100	180	220	8-ø19	500	550	M20×400	350	300	300	750
31	100HVT3-90	200	870	1670	250	24	30	100	180	220	8-ø19	500	550	M20×400	350	300	300	750
32	100HVT4-120	200	870	1770	250	24	30	100	180	220	8-ø19	500	550	M20×400	350	300	300	750
33	150HVT-20	240	995	1580	350	24	40	150	240	285	8-ø23	550	650	M24×500	480	300	300	900
34	150HVT2-30	240	995	1660	350	24	40	150	240	285	8-ø23	550	650	M24×500	480	300	300	900
35	150HVT2-40	240	995	1740	350	24	40	150	240	285	8-ø23	550	650	M24×500	480	300	300	900
36	150HVT3-60	240	975	1770	350	24	40	150	240	285	8-ø23	550	650	M24×500	480	300	300	900
37	150HVT4-80	240	995	1820	350	24	40	150	240	285	8-ø23	550	650	M24×500	480	300	300	900
38	150HVT5-100	240	995	1880	350	24	40	150	240	285	8-ø23	550	650	M24×500	480	300	300	900
39	150HVT6-120	240	995	1930	350	24	40	150	240	285	8-ø23	550	650	M24×500	480	300	300	900
40	200HVT-15	350	1070	1730	420	26	40	200	295	340	8-ø23	600	700	M24×500	500	300	300	1000
41	200HVT-20	350	1070	1810	420	26	40	200	295	340	8-ø23	600	700	M24×500	500	300	300	1000
42	200HVT2-30	350	1050	1830	420	26	40	200	295	340	8-ø23	600	700	M24×500	500	300	300	1000
43	200HVT2-40	350	1050	2030	420	26	40	200	295	340	8-ø23	600	700	M24×500	500	300	300	1000
44	200HVT3-65	350	1070	2100	420	26	40	200	295	340	8-ø23	600	700	M24×500	500	300	300	1000
45	200HVT4-90	350	1070	2320	420	26	40	200	295	340	8-ø23	600	700	M24×500	500	300	300	1000
46	250HVT-20	300	1125	1920	400	28	40	250	350	395	12-ø23	650	750	M24×500	550	300	300	1100
47	250HVT2-30	300	1105	2085	400	28	40	250	350	395	12-ø23	650	750	M24×500	550	300	300	1100
48	250HVT2-40	300	1105	2135	400	28	40	250	350	395	12-ø23	650	750	M24×500	550	300	300	1100
49	250HVT2-50	300	1125	2375	400	28	40	250	350	395	12-ø23	650	750	M24×500	550	300	300	1100
50	250HVT3-60	300	1125	2475	400	28	40	250	350	395	12-ø23	650	750	M24×500	550	300	300	1100
51	250HVT3-75	300	1125	2575	400	28	40	250	350	395	12-ø23	650	750	M24×500	550	300	300	1100
52	250HVT4-90	300	1125	2600	400	28	40	250	350	395	12-ø23	650	750	M24×500	550	300	300	1100
53	300HVT-6	350	1205	1945	450	28	50	300	400	445	12-ø23	700	800	M30×630	650	300	300	1200
54	300HVT-8	350	1205	2000	450	28	50	300	400	445	12-ø23	700	800	M30×630	650	300	300	1200
55	300HVT-10	350	1205	2100	450	28	50	300	400	445	12-ø23	700	800	M30×630	600	300	300	1200
56	300HVT-15	350	1205	2000	450	28	50	300	400	445	12-ø23	700	800	M30×630	600	300	300	1200

HVT Outline Drawing & Dimensions
Model : HVT

We reserve the right to modify specifications without prior notice.

Installation Dimension Table (outlet diameter 50-400mm and outlet above the base)

No.	Pump type	Dimension																
		H	H_1	H_2	L	T	h	A	B	C	n-ød	E	F	M × b	G	L_1	L_2	L_3
57	300HVT-20	350	1205	2100	450	28	50	300	400	445	12-ø23	700	800	M30×630	600	300	300	1200
58	300HVT2-30	350	1205	2185	450	28	50	300	400	445	12-ø23	700	800	M30×630	600	300	300	1200
59	300HVT2-40	350	1225	2785	450	28	50	300	400	445	12-ø23	700	800	M30×630	600	300	300	1200
60	300HVT3-60	350	1225	2785	450	28	50	300	400	445	12-ø23	700	800	M30×630	600	300	300	1200
61	300HVT4-80	350	1225	2870	450	28	50	300	400	445	12-ø23	700	800	M30×630	600	300	300	1200
62	350HVT-4	400	1345	2010	500	30	50	350	460	505	16-ø23	800	950	M30×630	700	300	300	1350
63	350HVT-6	400	1345	2085	500	30	50	350	460	505	16-ø23	800	950	M30×630	700	300	300	1350
64	350HVT-8	400	1345	2115	500	30	50	350	460	505	16-ø23	800	950	M30×630	700	300	300	1350
65	350HVT-10	400	1345	2140	500	30	50	350	460	505	16-ø23	800	950	M30×630	700	300	300	1350
66	350HVT-15	400	1325	2305	500	30	50	350	460	505	16-ø23	800	950	M30×630	700	300	300	1250
67	350HVT-20	400	1325	2355	500	30	50	350	460	505	16-ø23	800	950	M30×630	700	300	300	1250
68	350HVT2-30	400	1450	2940	500	30	50	350	460	505	16-ø23	800	950	M30×630	700	300	300	1250
69	350HVT2-40	400	1450	3030	500	30	50	350	460	505	16-ø23	800	950	M30×630	700	300	300	1250
70	350HVT3-60	400	1450	3125	500	30	50	350	460	505	16-ø23	800	950.	M30×630	700	300	300	1250
71	350HVT4-80	400	1450	3150	500	30	50	350	460	505	16-ø23	800	950	M30×630	700	300	300	1250
72	400HVT-4	450	1570	2310	550	32	50	400	515	565	16-ø28	900	1000	M30×630	800	350	400	1600
73	400HVT-6	450	1570	2365	550	32	50	400	515	565	16-ø28	900	1000	M30×630	800	350	400	1600
74	400HVT-8	450	1570	2465	550	32	50	400	515	565	16-ø28	900	1000	M30×630	800	350	400	1600
75	400HVT-10	450	1570	2550	550	32	50	400	515	565	16-ø28	900	1000	M30×630	800	350	400	1600
76	400HVT-13	450	1570	2600	550	32	50	400	515	565	16-ø28	900	1000	M30×630	800	350	400	1600
77	400HVT-16	450	1570	2820	550	32	50	400	515	565	16-ø28	900	1000	M30×630	800	350	400	1600
78	400HVT-20	450	1550	2800	550	32	50	400	55	565	16-ø28	900	1000	M30×630	800	350	400	1600
79	400HVT-25	450	1550	2900	550	32	50	400	515	565	16-ø28	900	1000	M30×630	800	350	400	1600
80	400HVT-30	450	1610	2960	550	32	50	400	515	565	16-ø28	900	1000	M30×630	800	350	400	1600
81	400HVT-35	450	1610	3145	550	32	50	400	515	565	16-ø28	900	1000	M30×630	800	350	400	1600
82	400HVT2-40	450	1610	3060	550	32	50	400	515	565	16-ø28	900	1000	M30×630	800	350	400	1600
83	400HVT2-50	450	1610	3145	550	32	50	400	515	565	16-ø28	900	1000	M30×630	800	350	400	1600
84	400HVT2-60	450	1610	3145	550	32	50	400	515	565	16-ø28	900	1000	M30×630	800	350	400	1600

HVT Outline Drawing & Dimensions
Model : HVT

Installation Dimension Diagram
(outlet diameter 500–600mm and outlet above the base)

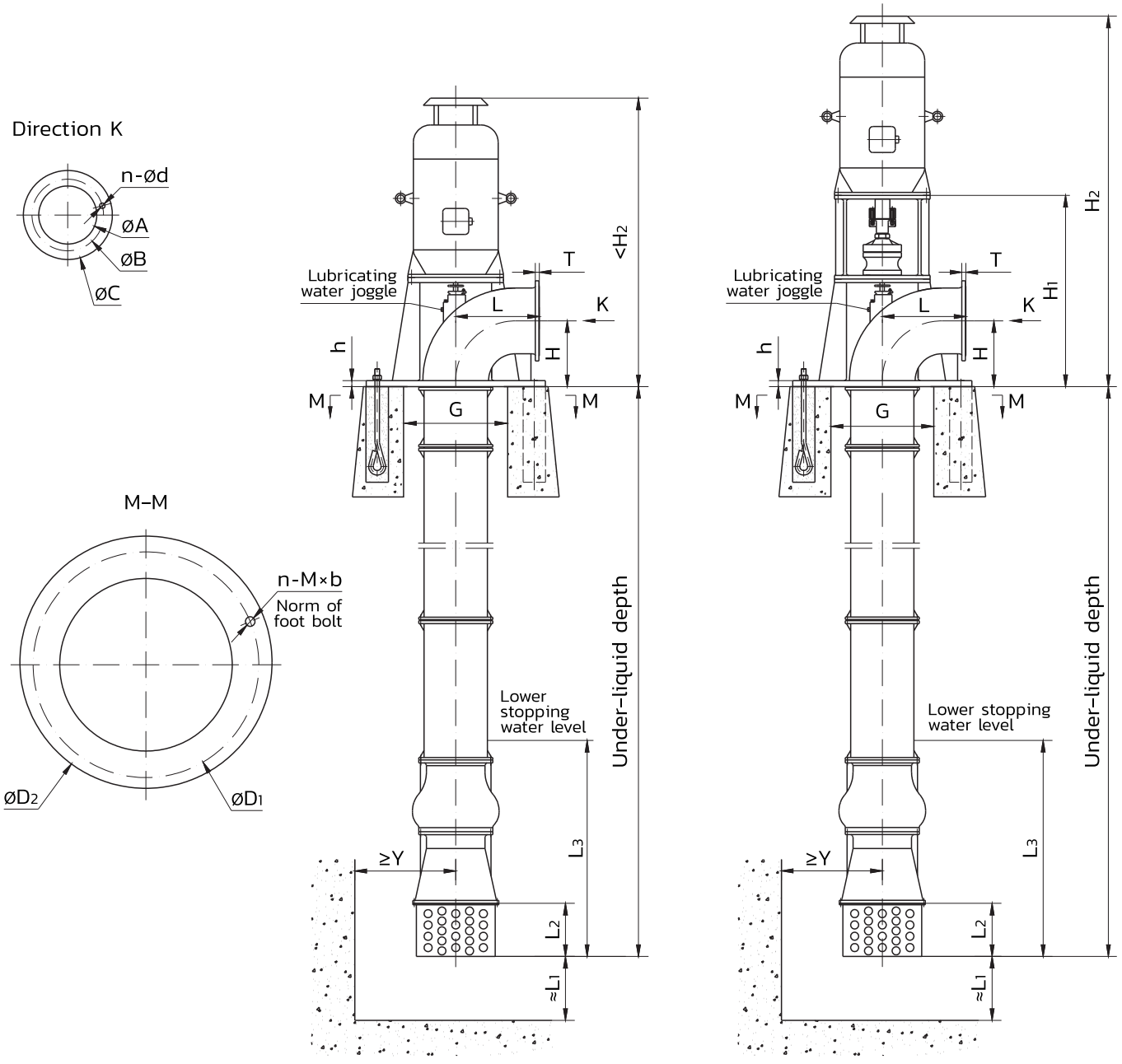

Note: the under-liquid depth is set by users

Fitted with YLB motor
(the axial force will be borne by the motor)

Fitted with Y series motor
(the axial force will be borne by the water pump)

Installation Dimension Table (outlet diameter 500-600mm and outlet above the base)

No.	Pump type	Dimension																	
		H	H_1	H_2	L	T	h	A	B	C	n-ød	D_1	D_2	n-M × b	G	L_1	L_2	L_3	Y
1	500HVT-4	550	1500	2400	700	34	50	500	620	670	20-ø28	1150	1250	8-M30×630	850	450	500	1800	400
2	500HVT-6	550	1500	2530	700	34	50	500	620	670	20-ø28	1150	1250	8-M30×630	850	450	500	1800	400
3	500HVT-8	550	1500	2750	700	34	50	500	620	670	20-ø28	1150	1250	8-M30×630	850	450	500	1800	400
4	500HVT-10	550	1500	2850	700	34	50	500	620	670	20-ø28	1150	1250	8-M30×630	850	450	500	1800	400
5	500HVT-12	550	1600	3050	700	34	50	500	620	670	20-ø28	1150	1250	8-M30×630	850	450	500	1800	400
6	500HVT-15	550	1600	3050	700	34	50	500	620	670	20-ø28	1150	1250	8-M30×630	850	450	500	1800	400
7	500HVT-20	550	1600	3150	700	34	50	500	620	670	20-ø28	1150	1250	8-M30×630	850	450	500	1800	400
8	500HVT-25	550	1800	3350	700	34	50	500	620	670	20-ø28	1150	1250	8-M30×630	850	450	500	1800	400
9	500HVT-30	550	1800	3550	700	34	50	500	620	670	20-ø28	1150	1250	8-M30×630	850	450	500	1800	400
10	500HVT-35	550	1900	3850	700	34	50	500	620	670	20-ø28	1150	1250	8-M30×630	850	450	500	1800	400
11	500HVT-40	550	1900	4100	700	34	50	500	620	670	20-ø28	1150	1250	8-M30×630	850	450	500	1800	400
12	600HVT-4	650	2000	3030	800	36	50	600	725	780	20-ø30	1400	1500	8-M30×630	1100	550	650	1900	600
13	600HVT-6	650	2000	3350	800	36	50	600	725	780	20-ø30	1400	1500	8-M30×630	1100	550	650	1900	600
14	600HVT-8	650	2000	3450	800	36	50	600	725	780	20-ø30	1400	1500	8-M30×630	1100	550	650	1900	600
15	600HVT-10	650	2000	3550	800	36	50	600	725	780	20-ø30	1400	1500	8-M30×630	1100	550	650	1900	600
16	600HVT-12	650	2000	3450	800	36	50	600	725	780	20-ø30	1400	1500	8-M30×630	1100	550	650	1900	600
17	600HVT-15	650	2000	3550	800	36	50	600	725	780	20-ø30	1400	1500	8-M30×630	1100	550	650	1900	600
18	600HVT-20	650	2000	3650	800	36	50	600	725	780	20-ø30	1400	1500	8-M30×630	1100	550	650	1900	600
19	600HVT-25	650	2000	3800	800	36	50	600	725	780	20-ø30	1400	1500	8-M30×630	1100	550	650	1900	600
20	600HVT-30	650	2100	4100	800	36	50	600	725	780	20-ø30	1400	1500	8-M30×630	1100	550	650	1900	600
21	600HVT-35	650	2100	4200	800	36	50	600	725	780	20-ø30	1400	1500	8-M30×630	1100	550	650	1900	600
22	600HVT-40	650	2150	4350	800	36	50	600	725	780	20-ø30	1400	1500	8-M30×630	1100	550	650	1900	600

We reserve the right to modify specifications without prior notice.

HVT Outline Drawing & Dimensions
Model : HVT

Installation Dimension Diagram
(outlet diameter less than 700mm and outlet above the base)

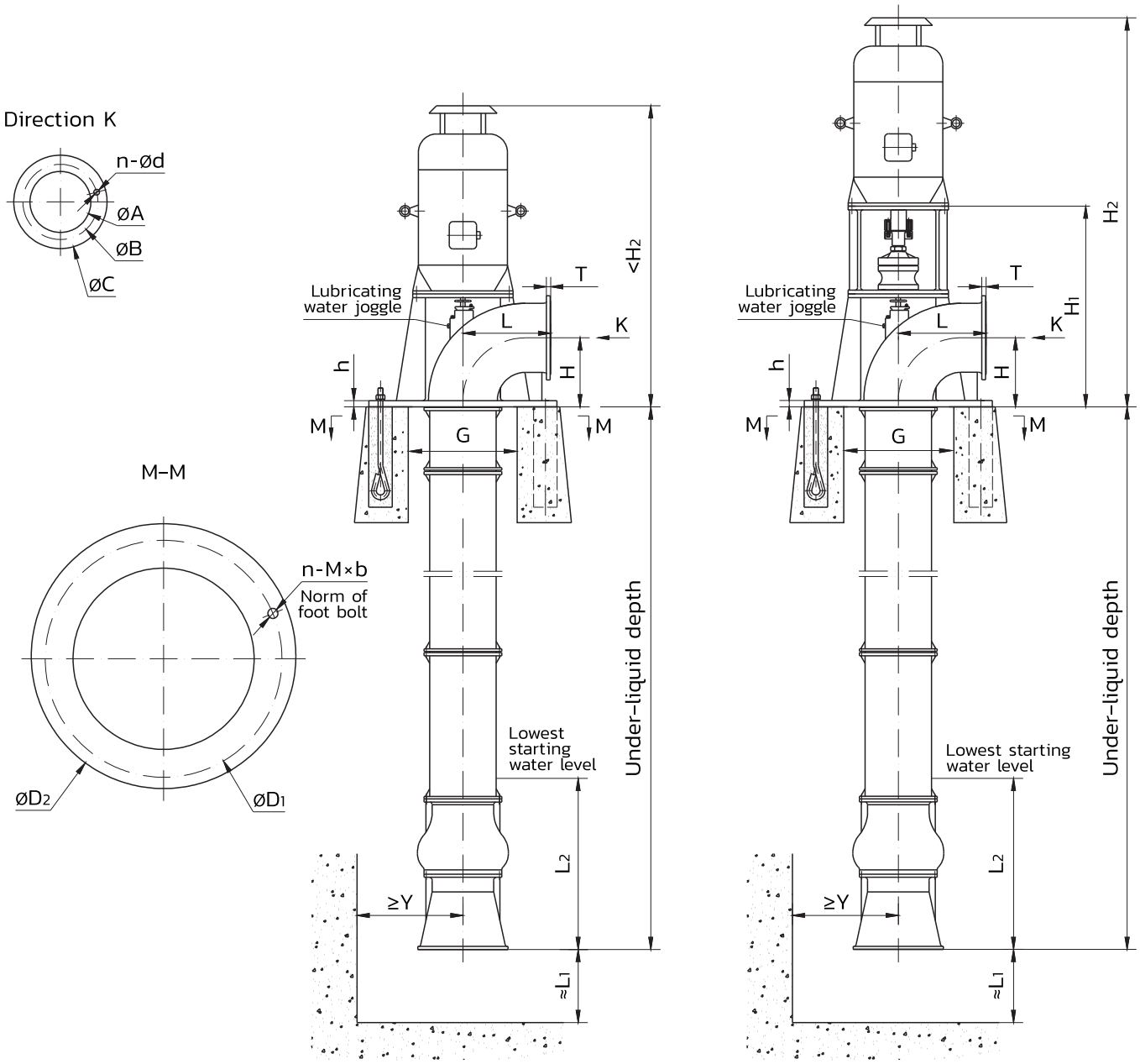

Note: the under-liquid depth is set by users

Fitted with YLB motor
(the axial force will be borne by the motor)

Fitted with Y series motor
(the axial force will be borne by the water pump)

HVT Outline Drawing & Dimensions
Model : HVT

Installation Dimension Table (outlet diameter less than 700mm and outlet above the base)

No.	Pump type	Dimension																
		H	H_1	H_2	L	T	h	A	B	C	n-Ød	D_1	D_2	n-M × b	G	L_1	L_2	Y
1	700HVT-4	700	2300	4350	700	30	40	700	810	860	24-ø26	1500	1600	8-M36×630	1200	600	1400	800
2	700HVT-6	700	2300	4350	700	30	40	700	810	860	24-ø26	1500	1600	8-M36×630	1200	600	1400	800
3	700HVT-8	700	2350	4400	700	30	40	700	810	860	24-ø26	1500	1600	8-M36×630	1200	600	1400	800
4	700HVT-10	700	2350	4450	700	30	40	700	810	860	24-ø26	1500	1600	8-M36×630	1200	600	1400	800
5	700HVT-12	700	2400	4550	700	30	40	700	810	860	24-ø26	1500	1600	8-M36×630	1200	600	1400	800
6	700HVT-15	700	2400	4650	700	30	40	700	810	860	24-ø26	1500	1600	8-M36×630	1200	600	1400	800
7	700HVT-20	700	2400	4700	700	30	40	700	810	860	24-ø26	1500	1600	8-M36×630	1200	600	1400	800
8	700HVT-25	700	2500	4750	700	30	40	700	810	860	24-ø26	1500	1600	8-M36×630	1200	600	1400	800
9	700HVT-30	700	2500	4850	700	30	40	700	810	860	24-ø26	1500	1600	8-M36×630	1200	600	1400	800
10	800HVT-4	800	2300	4350	800	30	40	800	920	975	24-ø30	1600	1800	8-M36×630	1300	700	1500	900
11	800HVT-6	800	2350	4400	800	30	40	800	920	975	24-ø30	1600	1800	8-M36×630	1300	700	1500	900
12	800HVT-8	800	2350	4450	800	30	40	800	920	975	24-ø30	1600	1800	8-M36×630	1300	700	1500	900
13	800HVT-10	800	2400	4550	800	30	40	800	920	975	24-ø30	1600	1800	8-M36×630	1300	700	1500	900
14	800HVT-12	800	2400	4650	800	30	40	800	920	975	24-ø30	1600	1800	8-M36×630	1300	700	1500	900
15	800HVT-15	800	2400	4700	800	30	40	800	920	975	24-ø30	1600	1800	8-M36×630	1300	700	1500	900
16	800HVT-20	800	2500	4750	800	30	40	800	920	975	24-ø30	1600	1800	8-M36×630	1300	700	1500	900
17	800HVT-25	800	2500	4850	800	30	40	800	920	975	24-ø30	1600	1800	8-M36×630	1300	700	1500	900
18	900HVT-4	900	2500	4750	900	36	40	900	1020	1075	24-ø30	1800	2000	12-M36×630	1500	800	1600	1000
19	900HVT-6	900	2500	4750	900	36	40	900	1020	1075	24-ø30	1800	2000	12-M36×630	1500	800	1600	1000
20	900HVT-8	900	2500	4800	900	36	40	900	1020	1075	24-ø30	1800	2000	12-M36×630	1500	800	1600	1000
21	900HVT-10	900	2500	4800	900	36	40	900	1020	1075	24-ø30	1800	2000	12-M36×630	1500	800	1600	1000
22	900HVT-14	900	2600	4850	900	36	40	900	1020	1075	24-ø30	1800	2000	12-M36×630	1500	800	1600	1000
23	900HVT-16	900	2650	4950	900	36	40	900	1020	1075	24-ø30	1800	2000	12-M36×630	1500	800	1600	1000
24	900HVT-20	900	2700	5050	900	36	40	900	1020	1075	24-ø30	1800	2000	12-M36×630	1500	800	1600	1000
25	900HVT-25	900	2700	5100	900	36	40	900	1020	1075	24-ø30	1800	2000	12-M36×630	1500	800	1600	1000
26	1000HVT-4	1000	2500	4800	1000	36	40	1000	1120	1175	28-ø30	1900	2100	16-M36×630	1600	900	1700	1100
27	1000HVT-6	1000	2600	4850	1000	36	40	1000	1120	1175	28-ø30	1900	2100	16-M36×630	1600	900	1700	1100
28	1000HVT-9	1000	2650	4950	1000	36	40	1000	1120	1175	28-ø30	1900	2100	16-M36×630	1600	900	1700	1100
29	1000HVT-10	1000	2800	5350	1000	36	40	1000	1120	1175	28-ø30	1900	2100	16-M36×630	1600	900	1700	1100
30	1000HVT-16	1000	2800	5500	1000	36	50	1000	1120	1175	28-ø30	1900	2100	16-M36×630	1600	900	1700	1100
31	1000HVT-18	1000	2800	5550	1000	36	50	1000	1120	1175	28-ø30	1900	2100	16-M36×630	1600	900	1700	1100
32	1000HVT-20	1000	2800	5700	1000	36	50	1000	1120	1175	28-ø30	1900	2100	16-M36×630	1600	900	1700	1100
33	1200HVT-4	1100	2700	5550	1200	40	50	1200	1340	1405	32-ø33	2000	2200	16-M36×630	1700	1100	1800	1400

We reserve the right to modify specifications without prior notice.

Installation Dimension Table (outlet diameter less than 700mm and outlet above the base)

No.	Pump type	Dimension																
		H	H_1	H_2	L	T	h	A	B	C	n-ød	D_1	D_2	n-M × b	G	L_1	L_2	Y
34	1200HVT-6	1100	2700	5600	1200	40	50	1200	1340	1405	32-ø33	2000	2200	16-M36×630	1700	1100	1800	1400
35	1200HVT-9	1100	2700	5650	1200	40	50	1200	1340	1405	32-ø33	2000	2200	16-M36×630	1700	1100	1800	1400
36	1200HVT-12	1100	2700	5800	1200	40	50	1200	1340	1405	32-ø33	2000	2200	16-M36×630	1700	1100	1800	1400
37	1200HVT-14	1100	2800	5950	1200	40	50	1200	1340	1405	32-ø33	2000	2200	16-M36×630	1700	1100	1800	1400
38	1200HVT-16	1100	2800	6100	1200	40	50	1200	1340	1405	32-ø33	2000	2200	16-M36×630	1700	1100	1800	1400
39	1200HVT-18	1100	2800	6150	1200	40	50	1200	1340	1405	32-ø33	2000	2200	16-M36×630	1700	1100	1800	1400
40	1200HVT-20	1100	2800	6300	1200	40	50	1200	1340	1405	32-ø33	2000	2200	16-M36×630	1700	1100	1800	1400
41	1200HVT-24	1100	2900	6400	1200	40	50	1200	1340	1405	32-ø33	2000	2200	16-M36×630	1700	1100	1800	1400
42	1400HVT-14	1300	3400	5800	1400	45	50	1400	1560	1630	36-ø36	2400	2600	16-M42×800	2000	1400	2100	1600
43	1400HVT-60	1300	3600	7200	1400	45	60	1400	1590	1675	36-ø42	2400	2600	16-M42×800	2000	1400	2100	1600
44	1400HVT-60A	1300	3600	6800	1400	45	60	1400	1590	1675	36-ø42	2400	2600	16-M42×800	2000	1400	2100	1600
45	1400HVT-60B	1300	3600	6800	1400	45	60	1400	1590	1675	36-ø42	2400	2600	16-M42×800	2000	1400	2100	1600
46	1400HVT-10	1300	3400	5700	1400	45	50	1400	1560	1630	36-ø36	2400	2600	16-M42×800	2000	1400	2100	1600
47	1500HVT-26	1400	4200	6400	1500	45	50	1500	1660	1730	36-ø36	2500	2700	16-M48×1000	2100	1500	2300	1800
48	1600HVT-7	1500	4700	6600	1600	48	60	1600	1760	1830	40-ø36	2700	2900	20-M48×1000	2200	1600	2500	2000
49	1600HVT-12	1500	4700	6600	1600	48	60	1600	1760	1830	40-ø36	2700	2900	20-M48×1000	2200	1600	2500	2000
50	1600HVT-13.5	1500	4700	6600	1600	48	60	1600	1760	1830	40-ø36	2700	2900	20-M48×1000	2200	1600	2500	2000
51	1600HVT-14.6	1500	4700	6600	1600	48	60	1600	1760	1830	40-ø36	2700	2900	20-M48×1000	2200	1600	2500	2000
52	1600HVT-20	1500	4700	6600	1600	48	60	1600	1760	1830	40-ø36	2700	2900	20-M48×1000	2200	1600	2500	2000
53	1600HVTB-16(-6°)	1500	4700	6600	1600	48	60	1600	1760	1830	40-ø36	2700	2900	20-M48×1000	2200	1600	2500	2000
54	1600HVTB-16(-4°)	1500	4700	6600	1600	48	60	1600	1760	1830	40-ø36	2700	2900	20-M48×1000	2200	1600	2500	2000
55	1600HVTB-16(-2°)	1500	4700	6600	1600	48	60	1600	1760	1830	40-ø36	2700	2900	20-M48×1000	2200	1600	2500	2000
56	1600HVTB-16(0°)	1500	4700	6600	1600	48	60	1600	1760	1830	40-ø36	2700	2900	20-M48×1000	2200	1600	2500	2000
57	1600HVTB-16(+2°)	1500	4800	6800	1600	48	60	1600	1760	1830	40-ø36	2700	2900	20-M48×1000	2200	1600	2500	2000
58	1600HVTB-16(+4°)	1500	4800	6800	1600	48	60	1600	1760	1830	40-ø36	2700	2900	20-M48×1000	2200	1600	2500	2000
59	1600HVT-19	1500	4900	7200	1600	48	60	1600	1760	1830	40-ø36	2700	2900	20-M48×1000	2200	1600	2500	2000
60	1600HVTB-15.5(-4°)	1500	4700	6600	1600	48	60	1600	1760	1830	40-ø36	2700	2900	20-M48×1000	2200	1600	2500	2000
61	1600HVTB-15.5(-2°)	1500	4700	6600	1600	48	60	1600	1760	1830	40-ø36	2700	2900	20-M48×1000	2200	1600	2500	2000
62	1600HVTB-15.5(0°)	1500	4700	6600	1600	48	60	1600	1760	1830	40-ø36	2700	2900	20-M48×1000	2200	1600	2500	2000
63	1600HVTB-15.5(+2°)	1500	4700	6600	1600	48	60	1600	1760	1830	40-ø36	2700	2900	20-M48×1000	2200	1600	2500	2000
64	1600HVTB-15.5(+4°)	1500	4700	6600	1600	48	60	1600	1760	1830	40-ø36	2700	2900	20-M48×1000	2200	1600	2500	2000
65	1800HVT-34	1600	5500	8650	2000	50	60	1800	1970	2045	44-ø42	2800	3000	20-M48×1000	2300	2000	3000	2500
66	1800HVT-34A	1600	5500	8650	2000	50	60	1800	1970	2045	44-ø42	2800	3000	20-M48×1000	2300	2000	3000	2500

We reserve the right to modify specifications without prior notice.

HVT Outline Drawing & Dimensions
Model : HVT

HVT Outline Drawing & Dimensions
Model : HVT

Installation Dimension Diagram
(outlet diameter 50-600mm and outlet under the base)

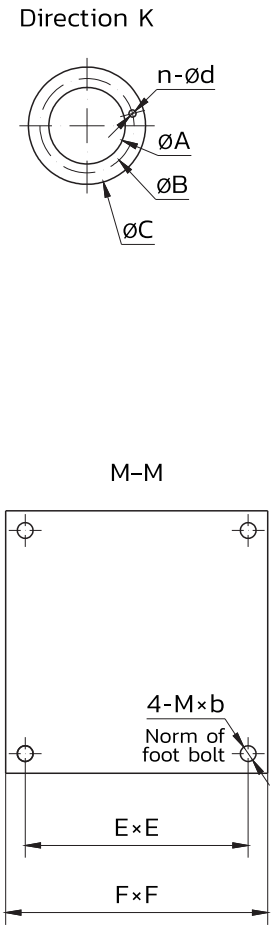

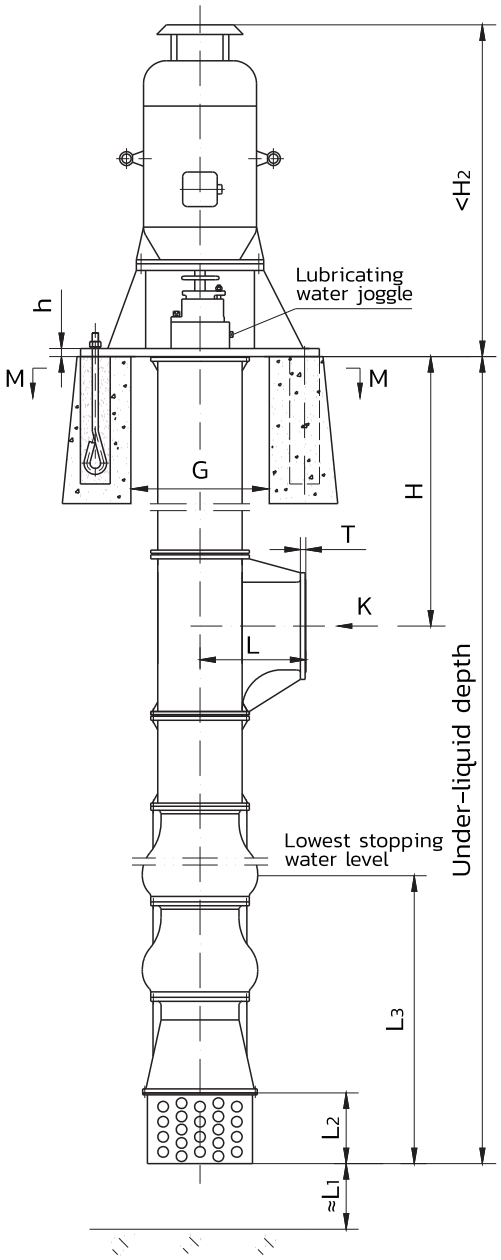

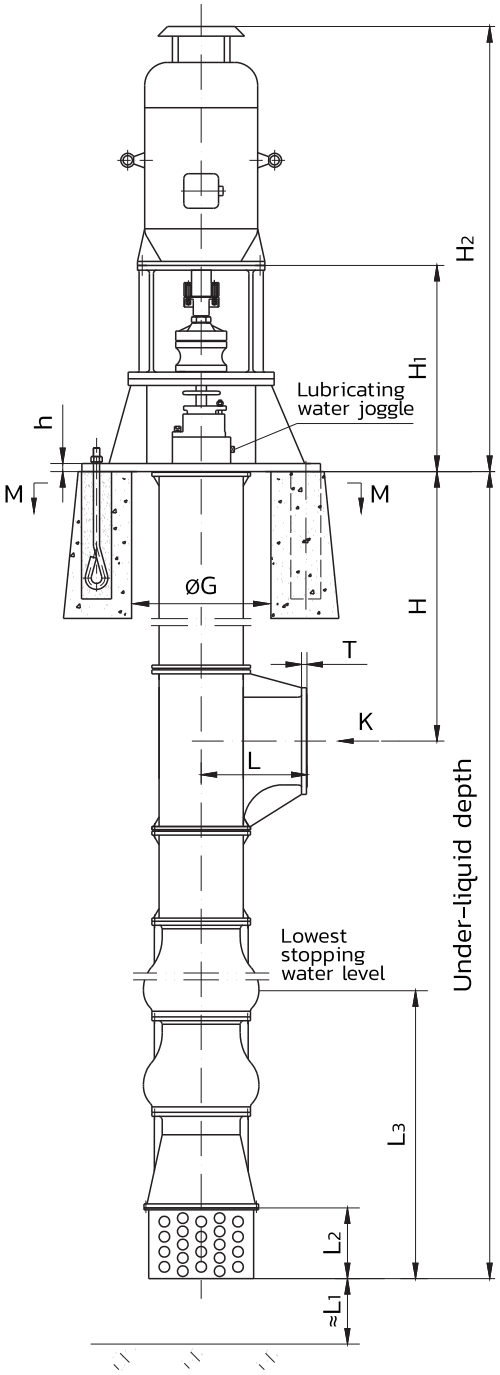

Note: the under-liquid depth is set by users

Fitted with YLB motor
(the axial force will be borne by the motor)

Fitted with Y series motor
(the axial force will be borne by the water pump)

HVT Outline Drawing & Dimensions
Model : HVT

Installation Dimension Table (outlet diameter 50-600mm and outlet under the base)

No.	Pump type	Dimension																
		H	H_1	H_2	L	T	h	A	B	C	n-ød	E	F	M × b	G	L_1	L_2	L_3
1	50HVT-10-X	500	450	760	120	20	20	50	125	165	4-ø19	400	500	M16×300	350	300	200	500
2	50HVT2-20-X	500	450	785	120	20	20	50	125	165	4-ø19	400	500	M16×300	350	300	200	500
3	65HVT-10-X	550	500	820	150	20	20	65	145	185	4-ø19	450	550	M20×400	400	300	200	550
4	65HVT2-20-X	550	500	840	150	20	20	65	145	185	4-ø19	450	550	M20×400	400	300	200	550
5	80HVT-15-X	600	550	890	150	22	20	80	160	200	8-ø19	500	600	M20×400	450	300	200	600
6	80HVT-25-X	600	550	930	150	22	20	80	160	200	8-ø19	500	600	M20×400	450	300	200	600
7	100HVT-15-X	700	620	1015	200	24	20	100	180	220	8-ø19	500	600	M20×500	450	300	300	750
8	100HVT-30-X	700	650	1055	200	24	20	100	180	220	8-ø19	500	600	M20×500	450	300	300	750
9	150HVT-20-X	800	695	1280	250	26	25	150	240	285	8-ø23	600	700	M24×500	550	300	300	900
10	150HVT2-30-X	800	695	1290	250	26	25	150	240	285	8-ø23	600	700	M24×500	550	300	300	900
11	150HVT2-40-X	800	695	1340	250	26	25	150	240	285	8-ø23	600	700	M24×500	550	300	300	900
12	200HVT-15-X	900	770	1330	250	26	25	200	295	340	8-ø23	600	700	M24×500	550	300	300	1000
13	200HVT-22-X	900	770	1410	250	26	25	200	295	340	8-ø23	600	700	M24×500	550	300	300	1000
14	200HVT2-30-X	900	770	1430	250	26	25	200	295	340	8-ø23	600	700	M24×500	550	300	300	1000
15	200HVT2-40-X	900	770	1530	250	26	25	200	295	340	8-ø23	600	700	M24×500	550	300	300	1000
16	250HVT-20-X	1000	825	1495	300	28	25	250	350	395	12-ø23	700	800	M24×500	650	300	300	1100
17	250HVT-30-X	1000	850	1675	300	28	25	250	350	395	12-ø23	700	800	M24×500	650	300	300	1100
18	250HVT2-40-X	1000	850	1675	300	28	25	250	350	395	12-ø23	700	800	M24×500	650	300	300	1100
19	300HVT-6-X	1100	900	1945	300	28	25	300	400	445	12-ø23	750	850	M30×630	700	300	300	1200
20	300HVT-8-X	1100	900	2000	300	28	25	300	400	445	12-ø23	750	850	M30×630	700	300	300	1200
21	300HVT-10-X	1100	900	2100	300	28	25	300	400	445	12-ø23	750	850	M30×630	700	300	300	1200
22	300HVT-15-X	1100	925	2000	300	28	25	300	400	445	12-ø23	750	850	M30×630	700	300	300	1200
23	300HVT-20-X	1100	925	2100	300	28	25	300	400	445	12-ø23	750	850	M30×630	700	300	300	1200
24	300HVT2-30-X	1100	925	2185	300	28	25	300	400	445	12-ø23	750	850	M30×630	700	300	300	1200
25	300HVT2-40-X	1100	950	2785	300	28	25	300	400	445	12-ø23	750	850	M30×630	700	300	300	1200
26	350HVT-4-X	1200	950	1710	350	30	30	350	460	505	16-ø23	900	1000	M30×630	800	300	300	1350
27	350HVT-6-X	1200	950	1785	350	30	30	350	460	505	16-ø23	900	1000	M30×630	800	300	300	1350
28	350HVT-8-X	1200	950	1815	350	30	30	350	460	505	16-ø23	900	1000	M30×630	800	300	300	1350
29	350HVT-10-X	1200	950	1840	350	30	30	350	460	505	16-ø23	900	1000	M30×630	800	300	300	1350
30	350HVT-15-X	1200	975	1905	350	30	30	350	460	505	16-ø23	900	1000	M30×630	800	300	300	1250

We reserve the right to modify specifications without prior notice.

We reserve the right to modify specifications without prior notice.

Installation Dimension Table (outlet diameter 50-600mm and outlet under the base)

No.	Pump type	Dimension																
		H	H_1	H_2	L	T	h	A	B	C	n-ød	E	F	M × b	G	L_1	L_2	L_3
31	350HVT-20-X	1200	975	2055	350	30	30	350	460	505	16-ø23	900	1000	M30×630	800	300	300	1250
32	350HVT2-30-X	1200	975	2540	350	30	30	350	460	505	16-ø23	900	1000	M30×630	800	300	300	1250
33	350HVT2-40-X	1200	975	2630	350	30	30	350	460	505	16-ø23	900	1000	M30×630	800	300	300	1250
34	400HVT-4-X	1300	1000	2010	400	32	30	400	515	565	16-ø28	1100	1250	M30×630	1000	350	400	1600
35	400HVT-6-X	1300	1000	2065	400	32	30	400	515	565	16-ø28	1100	1250	M30×630	1000	350	400	1600
36	400HVT-8-X	1300	1000	2465	400	32	30	400	515	565	16-ø28	1100	1250	M30×630	1000	350	400	1600
37	400HVT-10-X	1300	1000	2250	400	40	40	400	515	565	16-ø28	1100	1250	M30×630	1000	350	400	1600
38	400HVT-13-X	1300	1000	2300	400	32	30	400	515	565	16-ø28	1100	1250	M30×630	1000	350	400	1600
39	400HVT-16-X	1300	1000	2520	400	32	30	400	515	565	16-ø28	1100	1250	M30×630	1000	350	400	1600
40	400HVT-20-X	1300	1050	2600	400	32	30	400	515	565	16-ø28	1100	1250	M30×630	1000	350	400	1600
41	400HVT-25-X	1300	1050	2600	400	32	30	400	515	565	16-ø28	1100	1250	M30×630	1000	350	400	1600
42	400HVT-30-X	1300	1050	2660	400	32	30	400	515	565	16-ø28	1100	1250	M30×630	1000	350	400	1600
43	400HVT2-40-X	1300	1050	2760	400	32	30	400	515	565	16-ø28	1100	1250	M30×630	1000	350	400	1600
44	500HVT-4-X	1500	1050	2200	500	34	40	500	620	670	20-ø28	1400	1500	M36×630	1250	450	500	1800
45	500HVT-6-X	1500	1050	2330	500	34	40	500	620	670	20-ø28	1400	1500	M36×630	1250	450	500	1800
46	500HVT-8-X	1500	1050	2550	500	34	40	500	620	670	20-ø28	1400	1500	M36×630	1250	450	500	1800
47	500HVT-10-X	1500	1050	2650	500	34	40	500	620	670	20-ø28	1400	1500	M36×630	1250	450	500	1800
48	500HVT-12-X	1500	1200	2850	500	34	40	500	620	670	20-ø28	1400	1500	M36×630	1250	450	500	1800
49	500HVT-15-X	1500	1200	2850	500	34	40	500	620	670	20-ø28	1400	1500	M36×630	1250	450	500	1800
50	500HVT-20-X	1500	1200	2950	500	34	40	500	620	670	20-ø28	1400	1500	M36×630	1250	450	500	1800
51	500HVT-25-X	1500	1250	3050	500	34	40	500	620	670	20-ø28	1400	1500	M36×630	1250	450	500	1800
52	500HVT-30-X	1500	1250	3250	500	34	40	500	620	670	20-ø28	1400	1500	M36×630	1250	450	500	1800
53	600HVT-4-X	1800	1300	2730	600	36	40	600	725	780	20-ø30	1500	1600	M42×800	1300	550	600	1900
54	600HVT-6-X	1800	1300	3050	600	36	40	600	725	780	20-ø30	1500	1600	M42×800	1300	550	600	1900
55	600HVT-8-X	1800	1300	3150	600	36	40	600	725	780	20-ø30	1500	1600	M42×800	1300	550	600	1900
56	600HVT-10-X	1800	1300	3250	600	36	40	600	725	780	20-ø30	1500	1600	M42×800	1300	550	600	1900
57	600HVT-12-X	1800	1300	3350	600	36	40	600	725	780	20-ø30	1500	1600	M42×800	1300	550	600	1900
58	600HVT-15-X	1800	1350	3400	600	36	40	600	725	780	20-ø30	1500	1600	M42×800	1300	550	600	1900
59	600HVT-20-X	1800	1350	3450	600	36	40	600	725	780	20-ø30	1500	1600	M42×800	1300	550	600	1900
60	600HVT-25-X	1800	1350	3600	600	36	40	600	725	780	20-ø30	1500	1600	M42×800	1300	550	600	1900

HVT Outline Drawing & Dimensions
Model : HVT

Installation Dimension Diagram
(outlet diameter less than 700mm and outlet above the base)

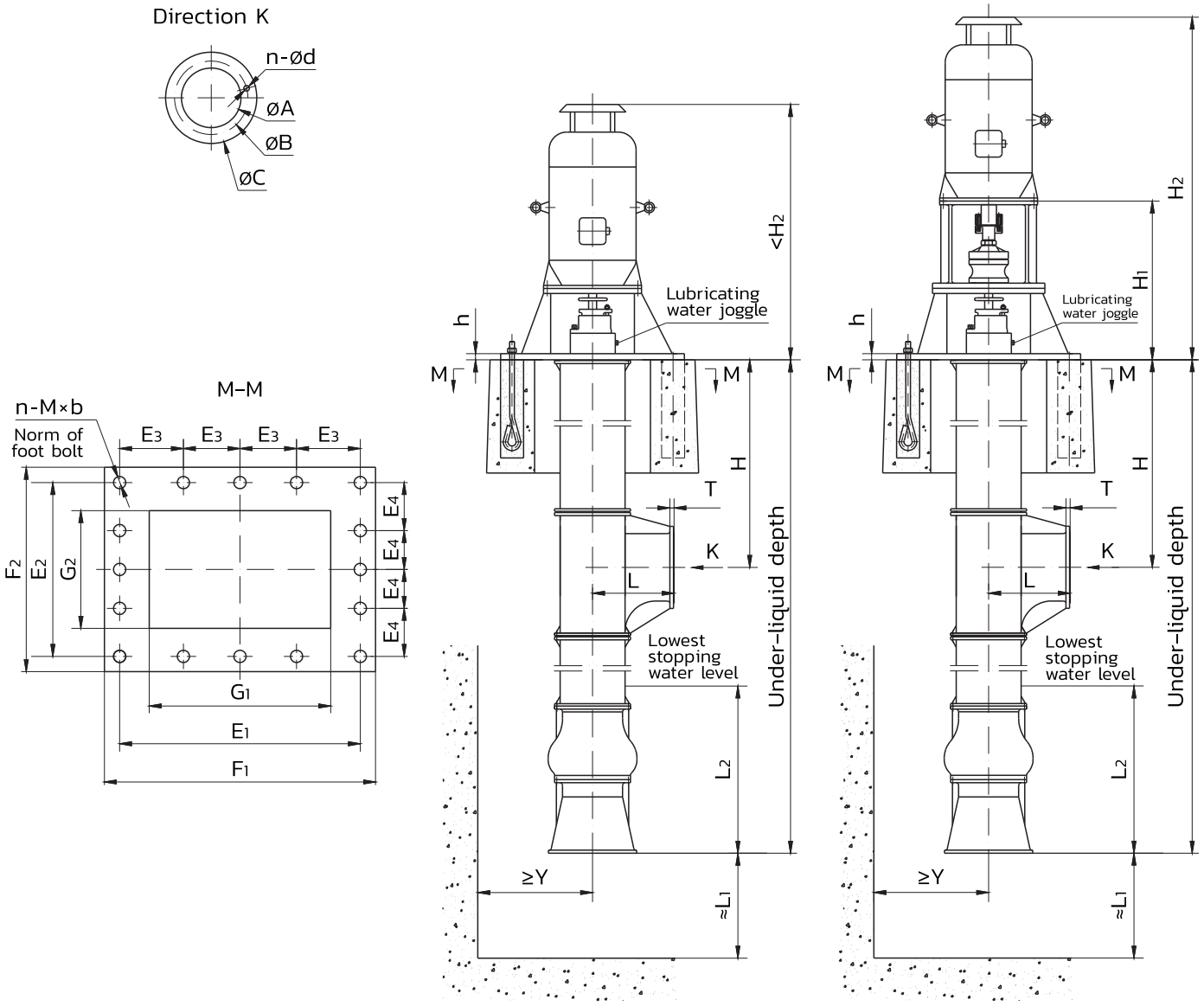

Note: H and the under-liquid depth is set by users

Fitted with YLB motor
(the axial force will be borne by the motor)

Fitted with Y series motor
(the axial force will be borne by the water pump)

HVT Outline Drawing & Dimensions
Model : HVT

Installation Dimension Table (outlet diameter less than 700mm and outlet under the base)

No.	Pump type	Dimension																				
		H_1	H_2	L	T	h	A	B	C	n-ød	E_1	E_2	E_3	E_4	F_1	F_2	n-M × b	G_1	G_2	L_1	L_2	Y
1	700HVT-10-X	1400	3950	700	30	40	700	810	860	24-ø26	1800	1500	600	500	2000	1700	12-M30×630	1500	1200	600	1400	800
2	700HVT-25-X	1400	4250	700	30	40	700	810	860	24-ø26	1800	1500	600	500	2000	1700	12-M30×630	1500	1200	600	1400	800
3	800HVT-7-X	1450	4050	750	30	40	800	920	975	24-ø30	1950	1650	650	550	2100	1800	12-M30×630	1600	1300	700	1500	900
4	800HVT-13.4-X	1450	4100	750	30	40	800	920	975	24-ø30	1950	1650	650	550	2100	1800	12-M30×630	1600	1300	700	1500	900
5	800HVT-17-X	1450	4150	750	30	40	800	920	975	24-ø30	1950	1650	650	550	2100	1800	12-M30×630	1600	1300	700	1500	900
6	900HVT-7-X	1500	4450	850	32	40	900	1020	1075	24-ø30	2100	1800	700	600	2300	2000	12-M36×630	1800	1500	800	1600	1000
7	900HVT-12.6-X	1500	4450	850	32	40	900	1020	1075	24-ø30	2100	1800	700	600	2300	2000	12-M36×630	1800	1500	800	1600	1000
8	900HVT-17-X	1500	4500	850	32	40	900	1020	1075	24-ø30	2100	1800	700	600	2300	2000	12-M36×630	1800	1500	800	1600	1000
9	1000HVT-7-X	1600	5200	900	35	50	1000	1120	1175	28-ø30	2300	1900	575	475	2500	2100	16-M36×630	2000	1600	900	1700	1100
10	1000HVT-13-X	1600	5250	900	35	50	1000	1120	1175	28-ø30	2300	1900	575	475	2500	2100	16-M36×630	2000	1600	900	1700	1100
11	1000HVT-17-X	1600	5400	900	35	50	1000	1120	1175	28-ø30	2300	1900	575	475	2500	2100	16-M36×630	2000	1600	900	1700	1100
12	1200HVT-8-X	1700	5500	1000	35	50	1200	1340	1405	32-ø33	2400	2000	600	500	2600	2200	16-M36×630	2100	1700	1100	1800	1400
13	1200HVT-10-X	1700	5650	1000	35	50	1200	1340	1405	32-ø33	2400	2000	600	500	2600	2200	16-M36×630	2100	1700	1100	1800	1400
14	1200HVT-17-X	1700	5950	1000	35	50	1200	1340	1405	32-ø33	2400	2000	600	500	2600	2200	16-M36×630	2100	1700	1100	1800	1400
15	1400HVT-9-X	1800	5700	1200	40	50	1400	1560	1630	36-ø36	2800	2300	700	575	3000	2500	16-M42×800	2500	2000	1400	2100	1600
16	1400HVT-14-X	1800	6200	1200	40	50	1400	1560	1630	36-ø36	2800	2300	700	575	3000	2500	16-M42×800	2500	2000	1400	2100	1600
17	1500HVT-26-X	1900	6400	1300	45	50	1500	1660	1730	36-ø36	2900	2400	725	600	3100	2600	16-M42×800	2600	2100	1500	2300	1800
18	1600HVT-7-X	2000	6600	1400	50	60	1600	1760	1830	40-ø36	3200	2600	640	520	3400	2800	20-M48×1000	2800	2200	1600	2500	2000
19	1600HVT-14.6-X	2000	6600	1400	50	60	1600	1760	1830	40-ø36	3200	2600	640	520	3400	2800	20-M48×1000	2800	2200	1600	2500	2000
20	1600HVT-20-X	2000	6600	1400	50	60	1600	1760	1830	40-ø36	3200	2600	640	520	3400	2800	20-M48×1000	2800	2200	1600	2500	2000
21	1600HVT-19-X	2000	6600	1400	50	60	1600	1760	1830	40-ø36	3200	2600	640	520	3400	2800	20-M48×1000	2800	2200	1600	2500	2000
22	1800HVT-7-X	2100	7950	1600	50	60	1800	1970	2045	44-ø42	3400	2800	680	560	3600	3000	20-M48×1000	3000	2400	2000	3000	2500
23	1800HVT-10-X	2100	8250	1600	50	60	1800	1970	2045	44-ø42	3400	2800	680	560	3600	3000	20-M48×1000	3000	2400	2000	3000	2500
24	1800HVT-13-X	2100	8450	1600	50	60	1800	1970	2045	44-ø42	3400	2800	680	560	3600	3000	20-M48×1000	3000	2400	2000	3000	2500
25	1800HVT-17-X	2100	8650	1600	50	60	1800	1970	2045	44-ø42	3400	2800	680	560	3600	3000	20-M48×1000	3000	2400	2000	3000	2500

We reserve the right to modify specifications without prior notice.

HVT Outline Drawing & Dimensions
Model : HVT

Loose core type installation Dimension Diagram
(outlet above the base)

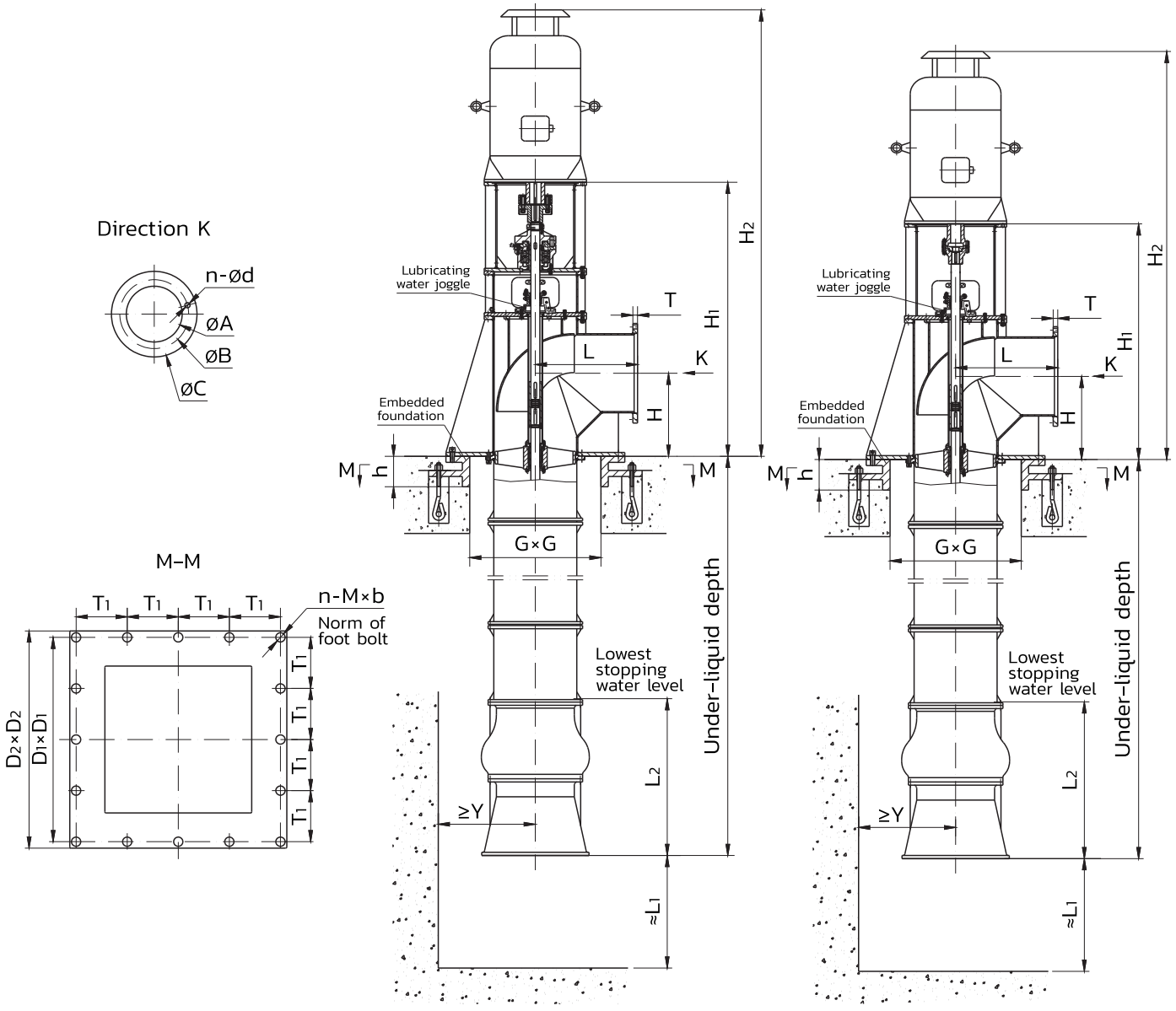

Note: the under-liquid depth is set by users

Fitted with Y series motor (the axial force will be borne by the water pump)

Fitted with YLB motor (the axial force will be borne by the motor, no reversal-resisting device is mounted on the pump, both pump and motor are jointed with a rigid clutch)

Installation Dimension Table (outlet above the base)

No.	Pump type	Dimension																	
		H	H_1	H_2	L	T	h	A	B	C	n-Ød	D_1	D_2	T_1	n-M × b	G	L_1	L_2	Y
1	600HVTC-15	650	2150	3850	800	36	150	600	725	780	20-ø30	1600	1700	800	8-M42×800	1150	500	1200	700
2	600HVTC-20	650	2150	3850	800	36	150	600	725	780	20-ø30	1600	1700	800	8-M42×800	1150	500	1200	700
3	700HVTC-15	750	2300	4150	900	30	150	700	810	860	24-ø26	1600	1700	800	8-M42×800	1150	600	1400	800
4	700HVTC-20	750	2300	4350	900	30	150	700	810	860	24-ø26	1600	1700	800	8-M42×800	1150	600	1400	800
5	800HVTC-15	850	2300	4550	1000	30	150	800	920	975	24-ø30	2000	2200	500	16-M42×800	1600	700	1500	900
6	800HVTC-20	850	2350	4600	1000	30	150	800	920	975	24-ø30	2000	2200	500	16-M42×800	1600	700	1500	900
7	900HVTC-15	950	2500	4750	1100	32	150	900	1020	1075	24-ø30	2000	2200	500	16-M42×800	1600	800	1600	1000
8	900HVTC-20	950	2500	4750	1100	32	150	900	1020	1075	24-ø30	2000	2200	500	16-M42×800	1600	800	1600	1000
9	1000HVTC-15	1000	2600	5150	1200	35	150	1000	1120	1175	28-ø30	2000	2200	500	16-M42×800	1600	900	1700	1100
10	1000HVTC-20	1000	2600	5300	1200	35	150	1000	1120	1175	28-ø30	2000	2200	500	16-M42×800	1600	900	1700	1100
11	1200HVTC-15	1100	2700	5750	1200	35	150	1200	1340	1405	32-ø33	2000	2200	500	16-M42×800	1600	1100	1800	1400
12	1200HVTC-19	1100	2700	5800	1200	35	150	1200	1340	1405	32-ø33	2000	2200	500	16-M42×800	1600	1100	1800	1400
13	1400HVTC-9	1300	3400	5800	1500	40	200	1400	1560	1630	36-ø36	2800	3000	700	16-M42×800	2300	1400	2100	1600
14	1400HVTCB-10(-4°)	1300	3400	5800	1500	40	200	1400	1560	1630	36-ø36	2800	3000	700	16-M42×800	2300	1400	2100	1600
15	1400HVTCB-10(-2°)	1300	3400	6000	1500	40	200	1400	1560	1630	36-ø36	2800	3000	700	16-M42×800	2300	1400	2100	1600
16	1400HVTCB-10(0°)	1300	3400	6200	1500	40	200	1400	1560	1630	36-ø36	2800	3000	700	16-M42×800	2300	1400	2100	1600
17	1400HVTCB-10(+2°)	1300	3400	6500	1500	40	200	1400	1560	1630	36-ø36	2800	3000	700	16-M42×800	2300	1400	2100	1600
18	1400HVTCB-10(+4°)	1300	3400	6800	1500	40	200	1400	1560	1630	36-ø36	2800	3000	700	16-M42×800	2300	1400	2100	1600
19	1400HVTCQ-10	1300	3400	6200	1500	40	200	1400	1560	1630	36-ø36	2800	3000	700	16-M42×800	2300	1400	2100	1600
20	1500HVTC-26	1400	4200	6400	1600	45	200	1500	1660	1730	36-ø36	2800	3000	700	16-M48×1000	2300	1500	2300	1800
21	1600HVTCQ-8	1500	4700	6600	1700	50	200	1600	1760	1830	40-ø36	2800	3000	700	16-M42×1000	2300	1600	2500	2000
22	1600HVTC-11(-4°)	1500	4700	6600	1700	50	200	1600	1760	1830	40-ø36	2800	3000	700	16-M42×1000	2300	1600	2500	2000
23	1600HVTC-11(-2°)	1500	4700	6600	1700	50	200	1600	1760	1830	40-ø36	2800	3000	700	16-M42×1000	2300	1600	2500	2000
24	1600HVTC-11(0°)	1500	4700	6600	1700	50	200	1600	1760	1830	40-ø36	2800	3000	700	16-M42×1000	2300	1600	2500	2000
25	1600HVTC-11(+2°)	1500	4700	6600	1700	50	200	1600	1760	1830	40-ø36	2800	3000	700	16-M42×1000	2300	1600	2500	2000
26	1600HVTC-11(+4°)	1500	4700	6600	1700	50	200	1600	1760	1830	40-ø36	2800	3000	700	16-M42×1000	2300	1600	2500	2000
27	1600HVTC-14	1500	4700	6600	1700	50	200	1600	1760	1830	40-ø36	2800	3000	400	28-M42×1000	2300	1600	2500	2000
28	1600HVTC-40	1500	4700	6600	1700	50	200	1600	1760	1830	40-ø36	2800	3000	400	28-M48×1000	2300	1600	2500	2000
29	1800HVTCQ-16	1600	5500	8150	2000	50	200	1800	1970	2045	44-ø42	2800	3000	400	28-M48×1000	2300	2000	3000	2500
30	1800HVTC-17	1600	5500	8050	2000	50	200	1800	1970	2045	44-ø42	28002	3000	400	28-M48×1000	2300	2000	3000	2500
31	1800HVTC-21	1600	5500	8550	2000	50	200	1800	1970	2045	44-ø42	800	3000	400	28-M48×1000	2300	2000	3000	2500

We reserve the right to modify specifications without prior notice.

HVT Outline Drawing & Dimensions
Model : HVT

Loose core type installation Dimension Diagram
(outlet under the base)

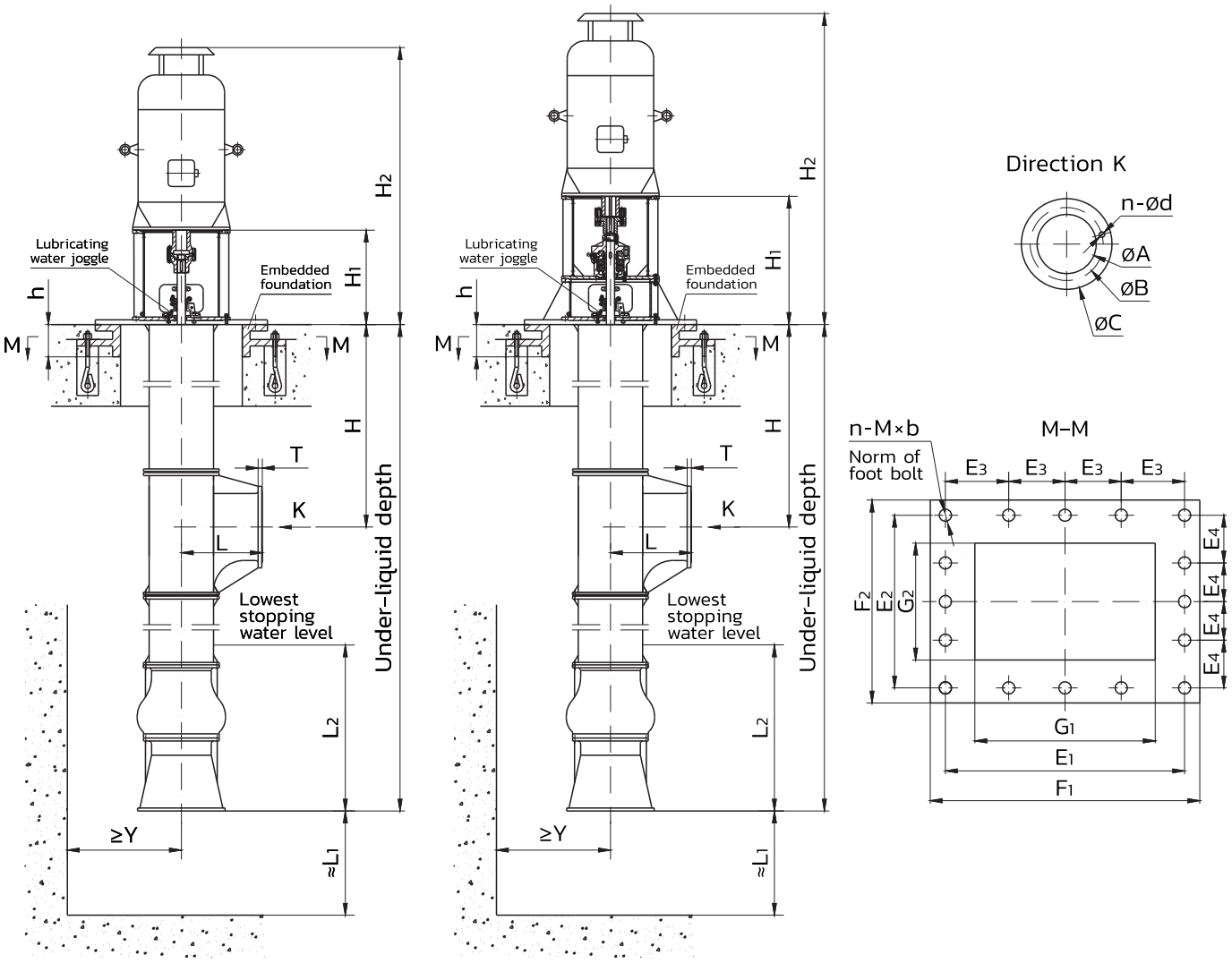

Fitted with YLB motor
(the axial force will be borne by the motor, no reversal-resisting device is mounted on the pump, both pump and motor are jointed with a rigid clutch)

Fitted with Y series motor
(the axial force will be borne by the water pump)

Note: H and the under-liquid depth is set by users

Installation Dimension Table (outlet under the base)

No.	Pump type	Dimension																				
		H_1	H_2	L	T	h	A	B	C	n-ød	E_1	E_2	E_3	E_4	F_1	F_2	n-M × b	G_1	G_2	L_1	L_2	Y
1	600HVTC-15-X	1350	2630	600	36	150	600	725	780	20-ø30	2000	1800	500	600	2200	2000	14-M30×630	1600	1400	500	1300	700
2	600HVTC-20-X	1350	2830	600	36	150	600	725	780	20-ø30	2000	1800	500	600	2200	2000	14-M30×630	1600	1400	500	1300	700
3	700HVTC-15-X	1400	2950	700	30	150	700	810	860	24-ø26	2000	1800	500	600	2200	2000	14-M30×630	1600	1400	600	1400	800
4	700HVTC-20-X	1400	3250	700	30	150	700	810	860	24-ø26	2000	1800	500	600	2200	2000	14-M30×630	1600	1400	600	1400	800
5	800HVTC-15-X	1450	3050	750	30	150	800	920	975	24-ø30	2000	1800	500	600	2200	2000	14-M30×630	1600	1400	700	1500	900
6	800HVTC-20-X	1450	3500	750	30	150	800	920	975	24-ø30	2000	1800	500	600	2200	2000	14-M30×630	1600	1400	700	1500	900
7	900HVTC-15-X	1500	3650	850	32	200	900	1020	1075	24-ø30	2400	2100	480	525	2500	2200	18-M30×630	1900	1600	800	1600	1000
8	900HVTC-20-X	1500	3850	850	32	200	900	1020	1075	24-ø30	2400	2100	480	525	2500	2200	18-M30×630	1900	1600	800	1600	1000
9	1000HVTC-15X	1600	4450	900	32	200	1000	1120	1175	28-ø30	2400	2100	480	525	2500	2200	18-M30×630	1900	1600	900	1700	1100
10	1000HVTC-20X	1600	4800	900	32	200	1000	1120	1175	28-ø30	2400	2100	480	525	2500	2200	18-M30×630	1900	1600	900	1700	1100
11	1200HVTC-15-X	1700	5200	1000	32	200	1200	1340	1405	32-ø35	2400	2100	480	525	2500	2200	18-M30×630	1900	1600	1100	1800	1400
12	1200HVTC-19-X	1700	5250	1000	32	200	1200	1340	1405	32-ø35	2400	2100	480	525	2500	2200	18-M30×630	1900	1600	1100	1800	1400
13	1400HVTC-9-X	1800	5700	1200	40	250	1400	1560	1630	36-ø36	3400	2800	680	560	3600	3000	20-M36×630	3000	2400	1400	2100	1600
14	1400HVTC-14-X	1800	6200	1200	40	250	1400	1560	1630	36-ø36	3400	2800	680	560	3600	3000	20-M36×630	3000	2400	1400	2100	1600
15	1500HVTC-26-X	1900	6400	1300	45	250	1500	1660	1730	36-ø36	3400	2800	680	560	3600	3000	20-M36×630	3000	2400	1500	2300	1800
16	1500HVTC-26A-X	1900	6400	1300	45	250	1500	1660	1730	36-ø36	3400	2800	680	560	3600	3000	20-M36×630	3000	2400	1500	2300	1800
17	1500HVTC-26B-X	1900	6600	1300	45	250	1500	1660	1730	36-ø36	3400	2800	680	560	3600	3000	20-M36×630	3000	2400	1500	2300	1800
18	1600HVTC-6-X	2000	6600	1400	50	250	1600	1760	1830	40-ø36	3400	2800	680	560	3600	3000	20-M42×800	3000	2400	1600	2500	2000
19	1600HVTCQ-10-X	2000	6700	1400	50	250	1600	1760	1830	40-ø36	3400	2800	680	560	3600	3000	20-M42×800	3000	2400	1600	2500	2000
20	1600HVTC-20-X	2000	6800	1400	50	250	1600	1760	1830	40-ø36	3400	2800	680	560	3600	3000	20-M42×800	3000	2400	1600	2500	2000
21	1800HVTC-24-X	2100	7200	1600	50	250	1800	1970	2045	44-ø42	3600	3000	600	500	3800	3200	24-M42×800	3200	2600	2000	3000	2500
22	1800HVTC-26-X	2100	7300	1600	50	250	1800	1970	2045	44-ø42	3600	3000	600	500	3800	3200	24-M42×800	3200	2600	2000	3000	2500
23	1800HVTC-28.5-X	2100	7400	1600	50	250	1800	1970	2045	44-ø42	3600	3000	600	500	3800	3200	24-M42×800	3200	2600	2000	3000	2500
24	2000HVTC-20-X	2200	5200	1600	50	50	2000	2180	2265	48-ø42	3600	3000	600	500	3800	3200	24-M42×800	3200	2600	1800	2800	2200
25	2000HVTC-24-X	2400	5800	1600	50	50	2000	2180	2265	48-ø42	3600	3000	600	500	3800	3200	24-M42×800	3200	2600	1800	2800	2200
26	2200HVTC-27.5-X	2800	6300	1800	54	55	2200	2390	2475	52-ø42	3720	3120	620	520	3920	3320	24-M42×800	3320	2720	2000	3000	2400
27	2400HVTC-24-X	3000	6600	2000	60	60	2400	2600	2685	56-ø42	2900	3300	650	550	4100	3500	24-M42×800	3500	2900	2200	3200	2600

We reserve the right to modify specifications without prior notice.

HVT Outline Drawing & Dimensions
Model : HVT

Performance Curve

HVT type pump atlas of style

HVT Type Performance Curve
(outlet diameter more than 600mm)

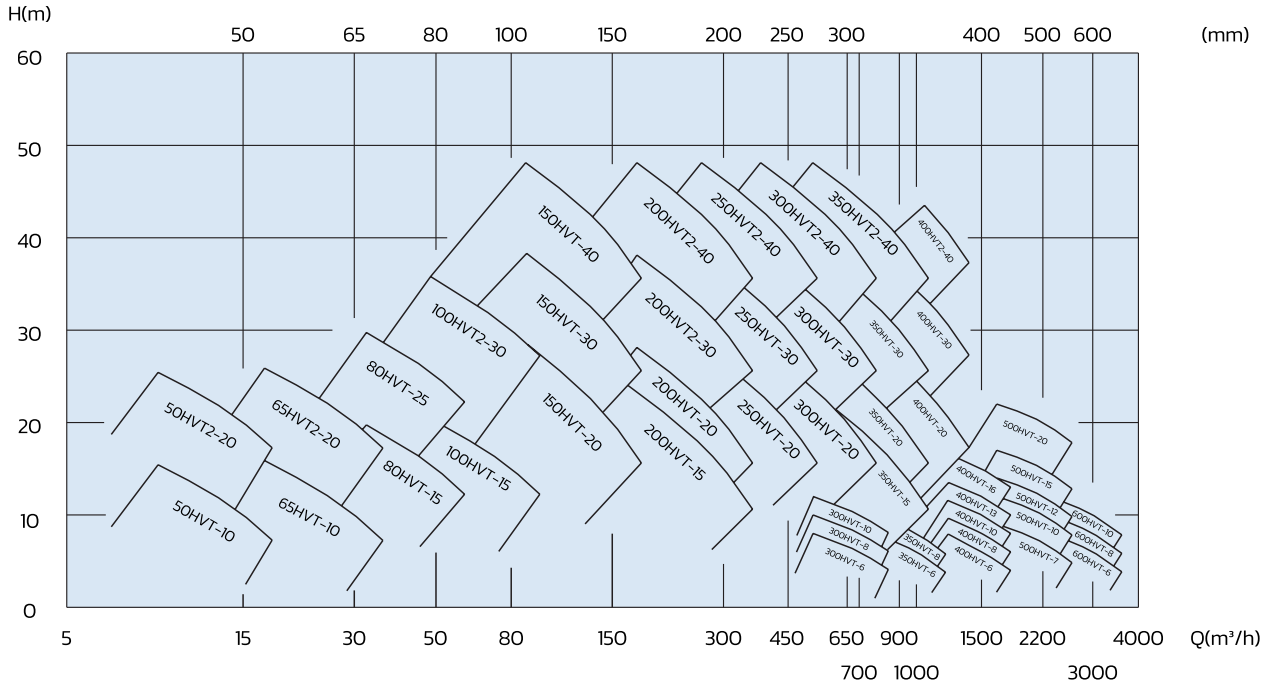

HVT type pump performance curve drawing

HVT Type Performance Curve
(outlet diameter more than 600mm)

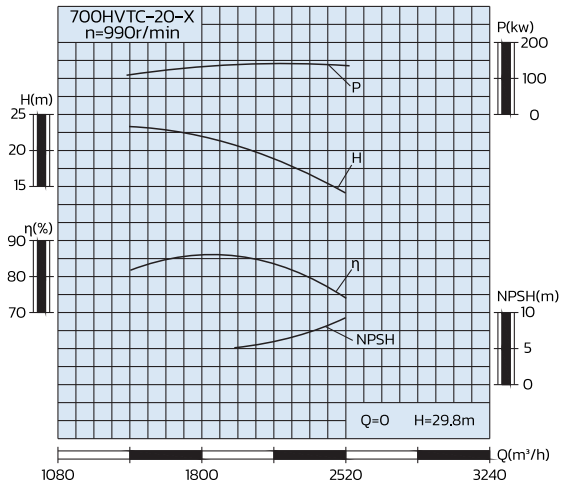

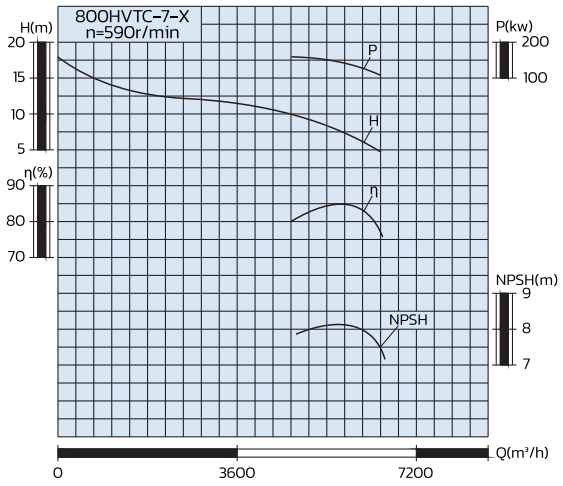

Performance Curve

HVT type pump performance curve drawing

HVT Type Performance Curve
(outlet diameter more than 600mm)

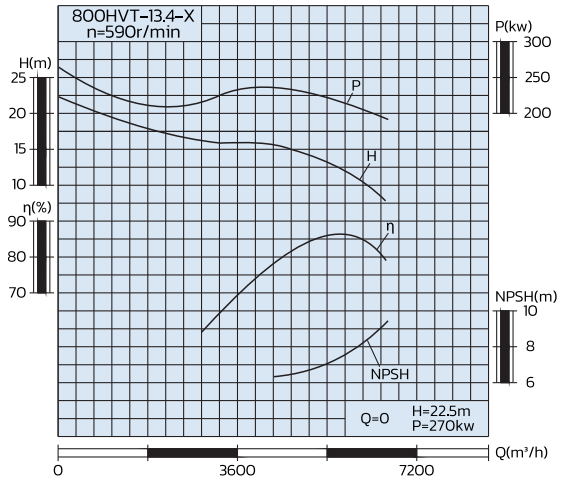

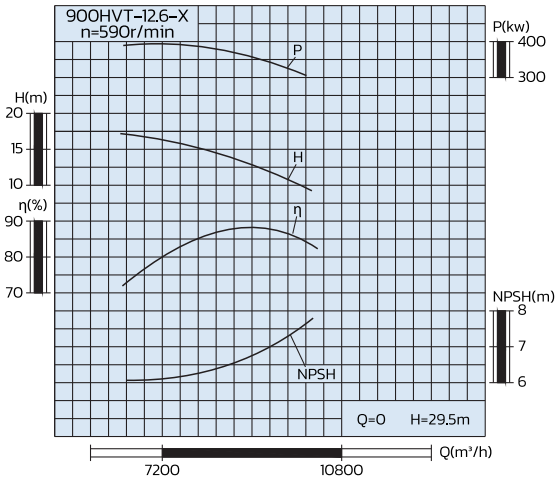

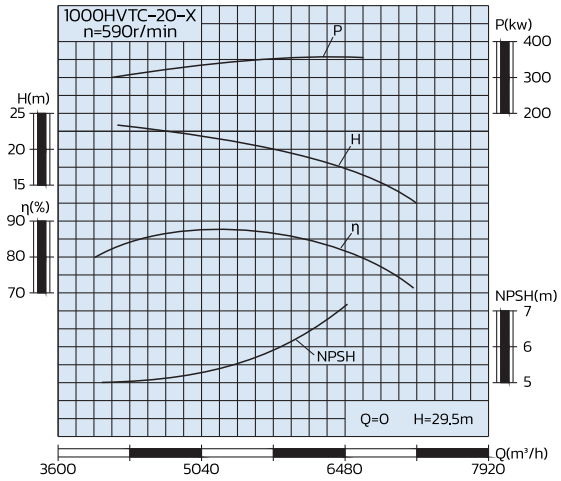

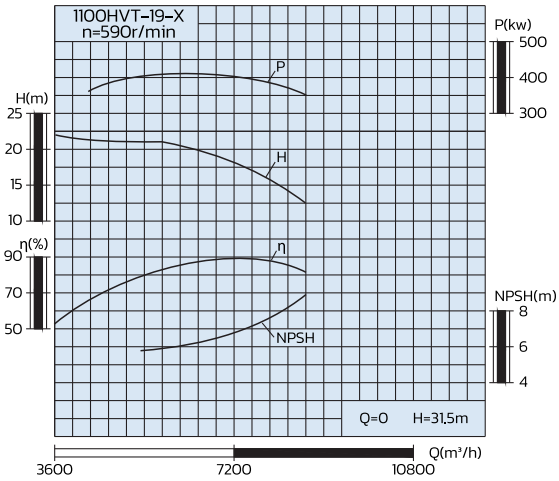

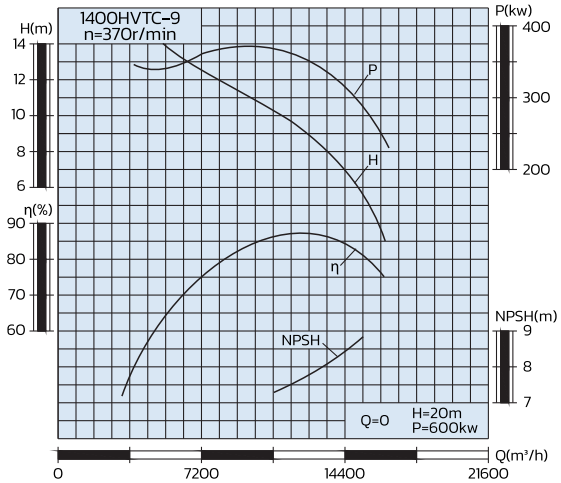

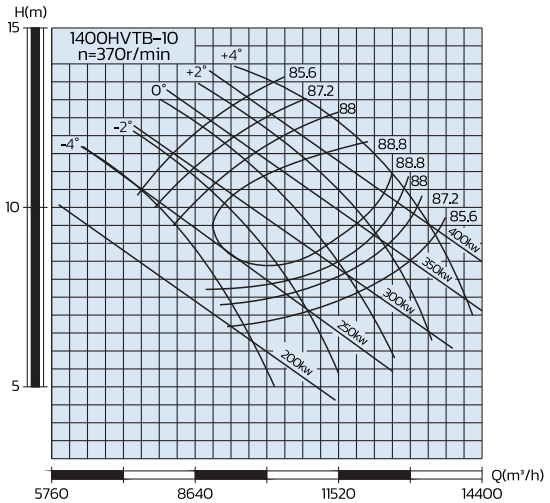

Performance Curve

HVT type pump performance curve drawing

HVT Type Performance Curve
(outlet diameter more than 600mm)

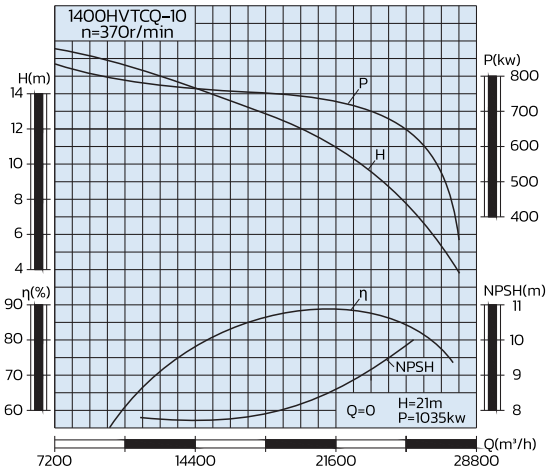

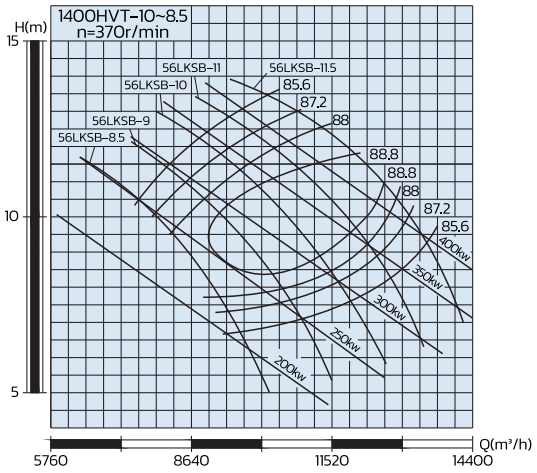

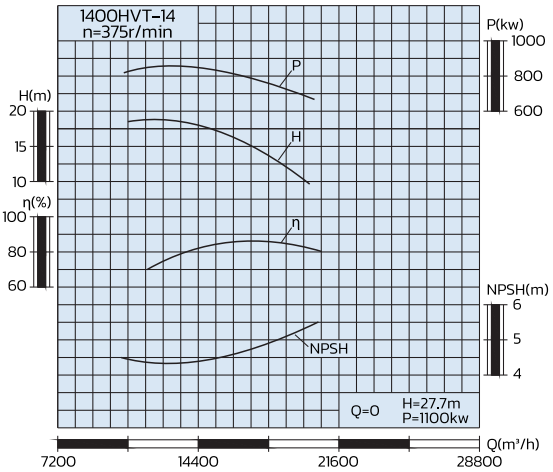

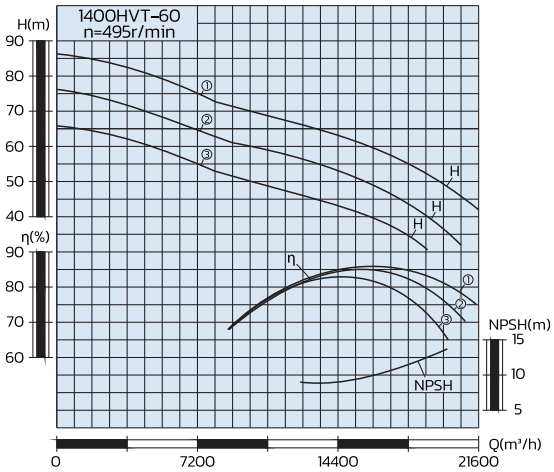

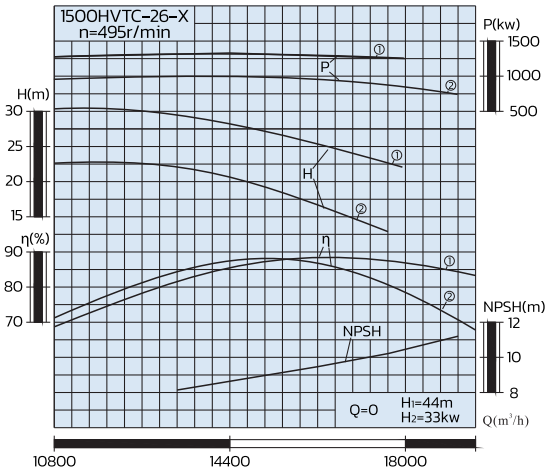

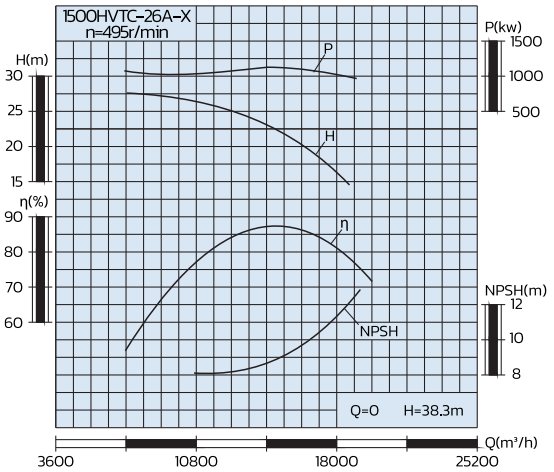

Performance Curve

HVT type pump performance curve drawing

HVT Type Performance Curve
(outlet diameter more than 600mm)

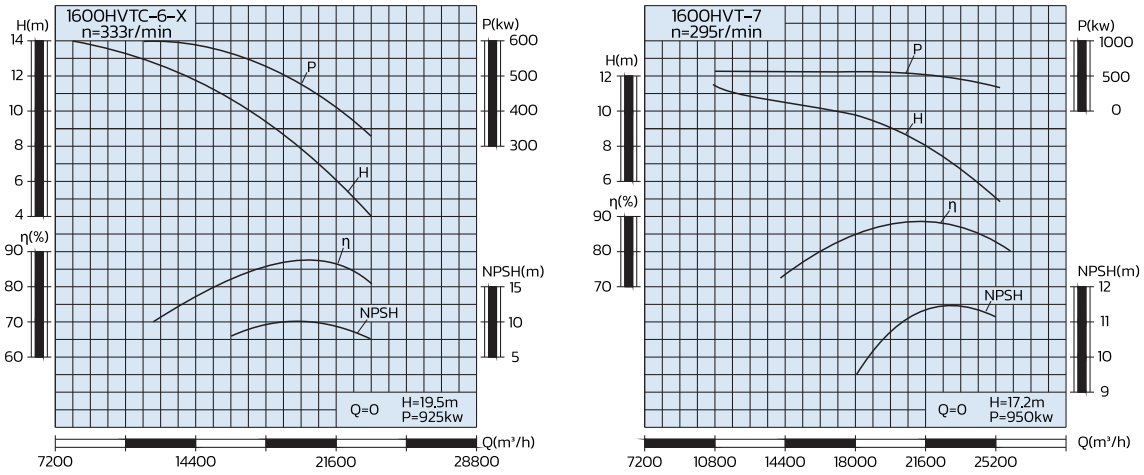

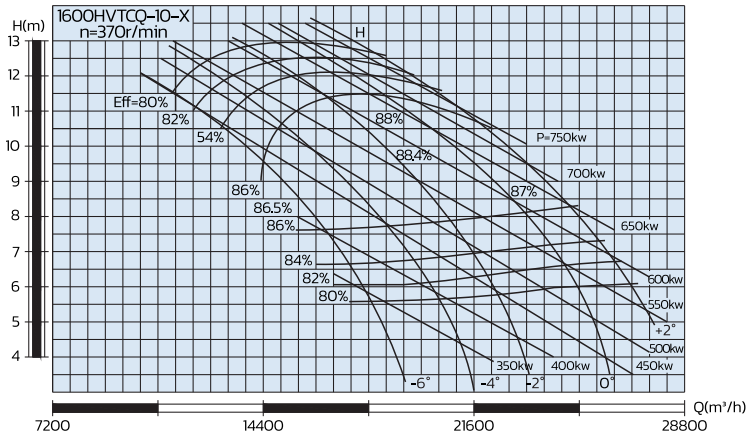

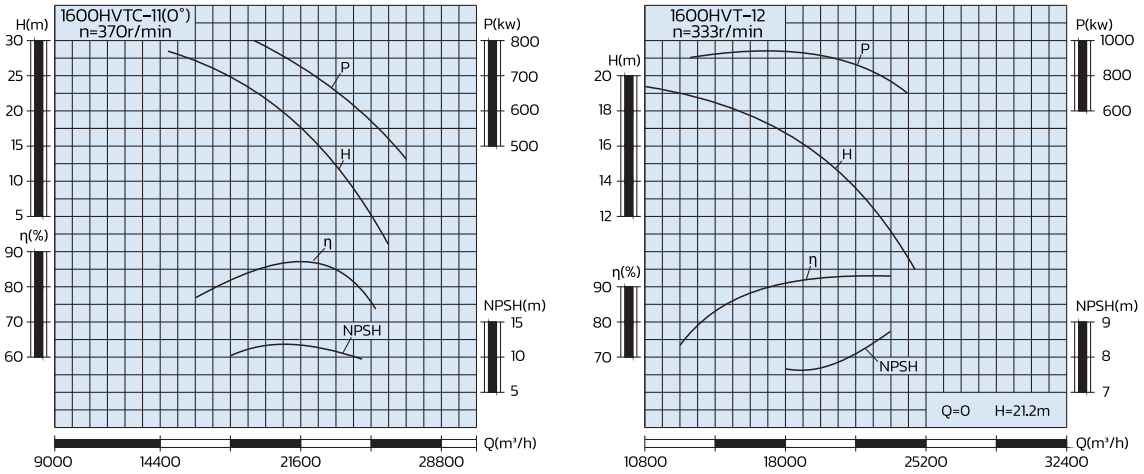

Performance Curve

HVT type pump performance curve drawing

HVT Type Performance Curve
(outlet diameter more than 600mm)

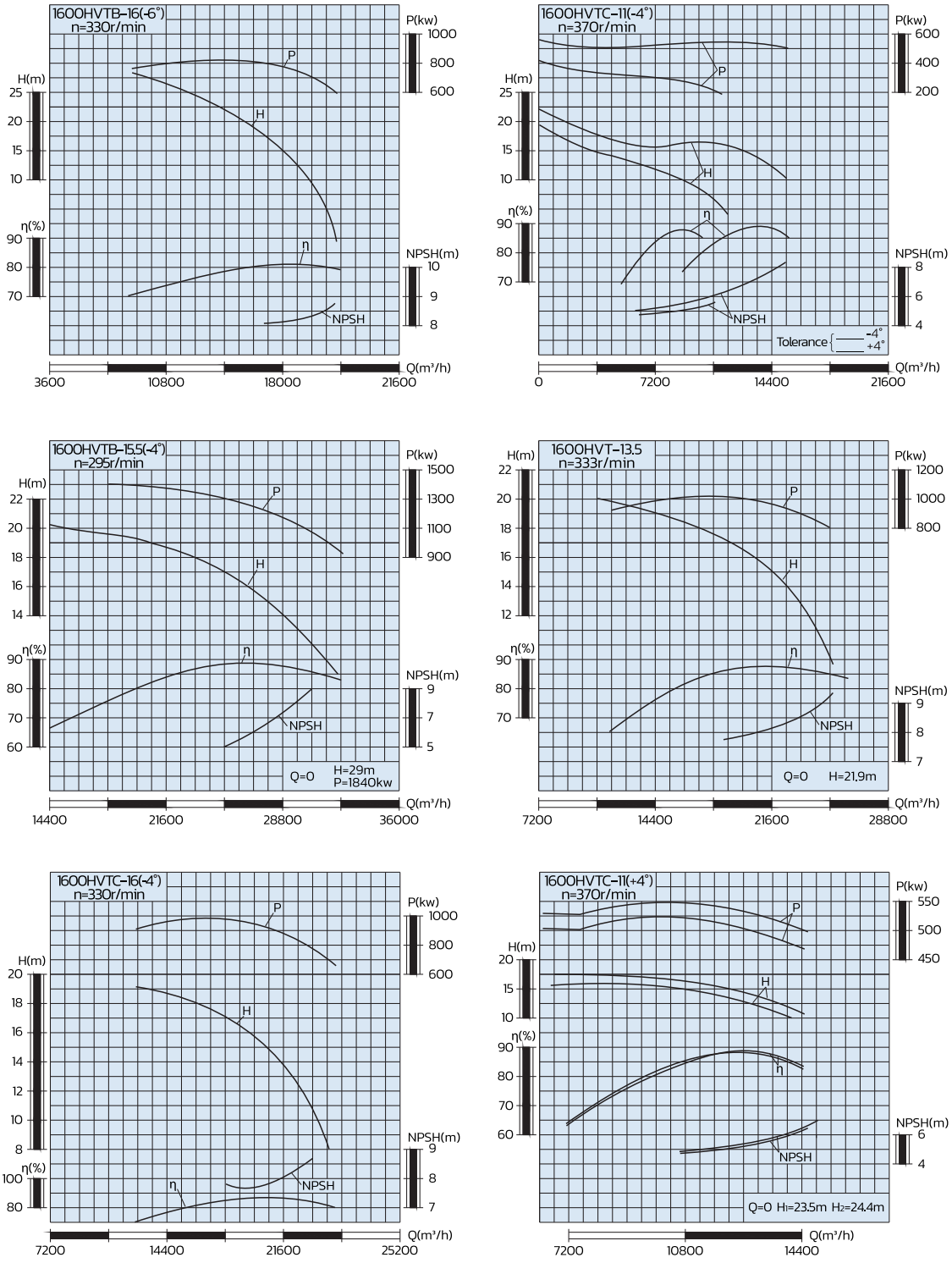

HVT type pump performance curve drawing

HVT Type Performance Curve
(outlet diameter more than 600mm)

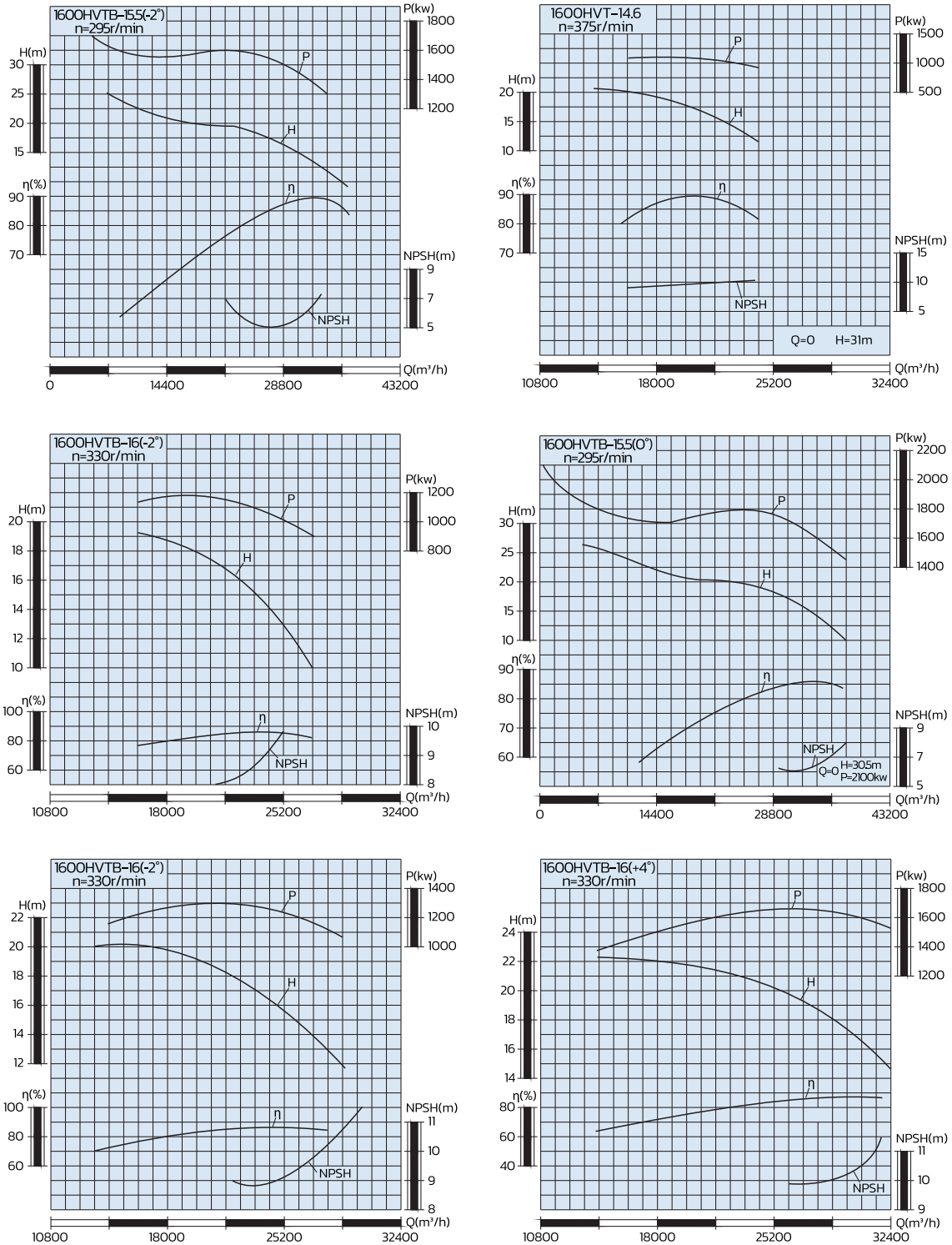

Performance Curve

HVT type pump performance curve drawing

HVT Type Performance Curve
(outlet diameter more than 600mm)

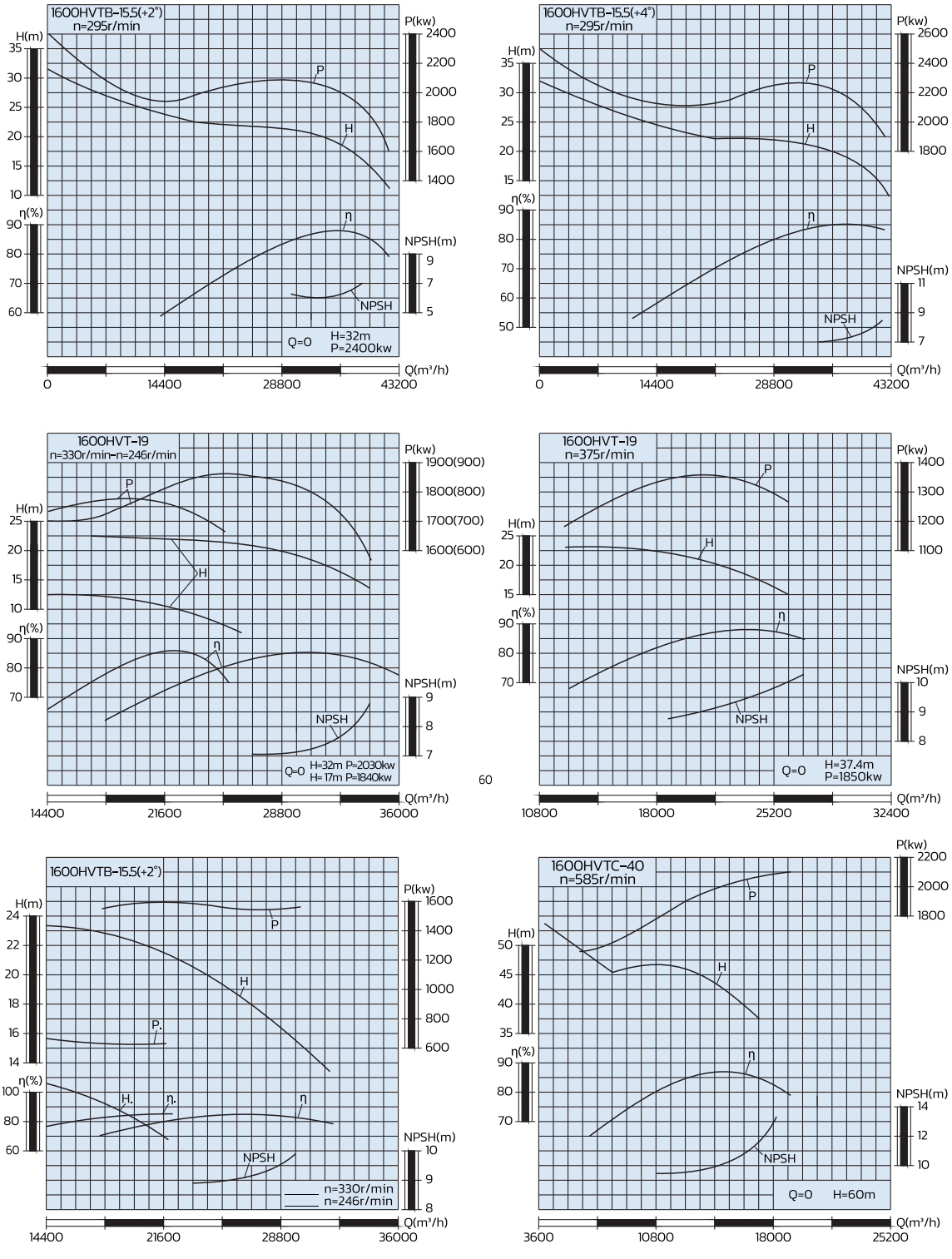

Performance Curve

HVT type pump performance curve drawing

HVT Type Performance Curve
(outlet diameter more than 600mm)

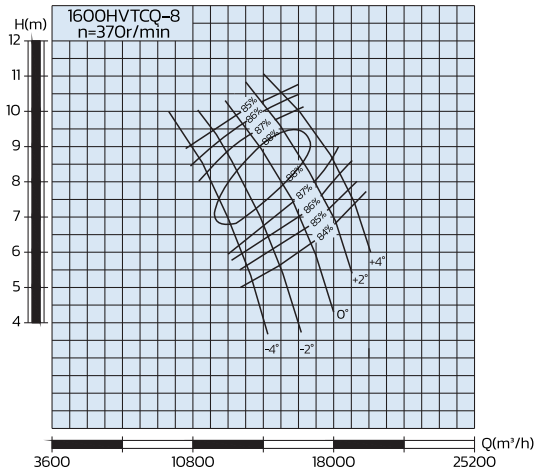

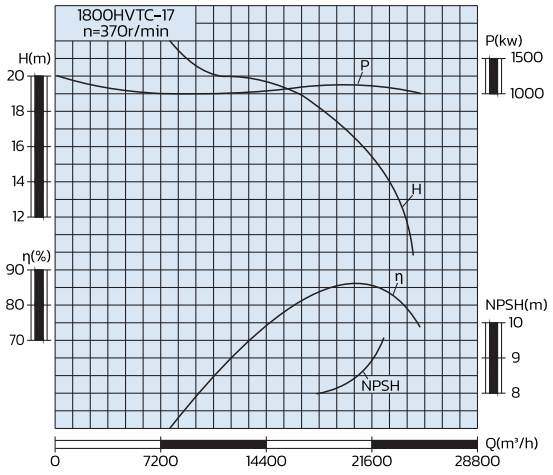

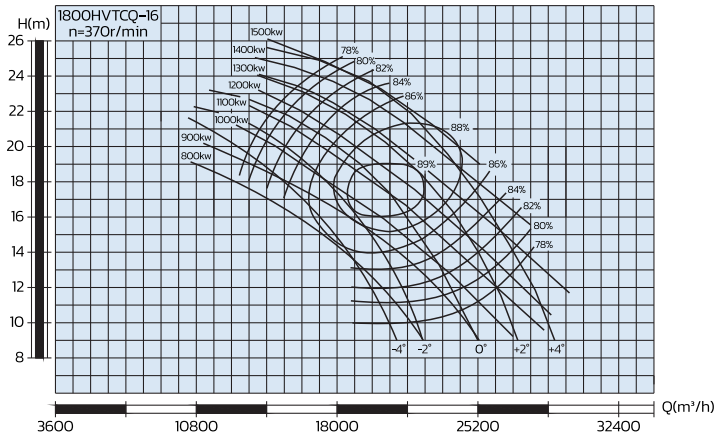

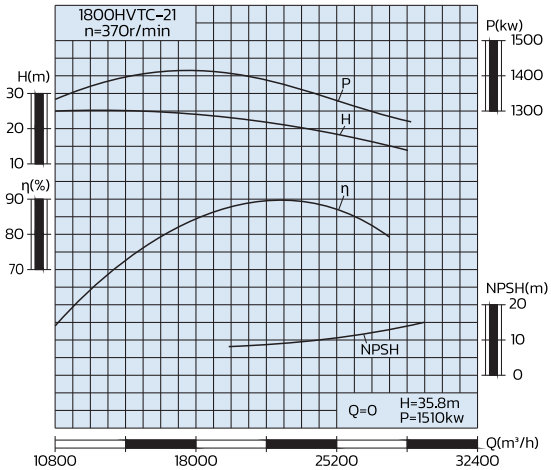

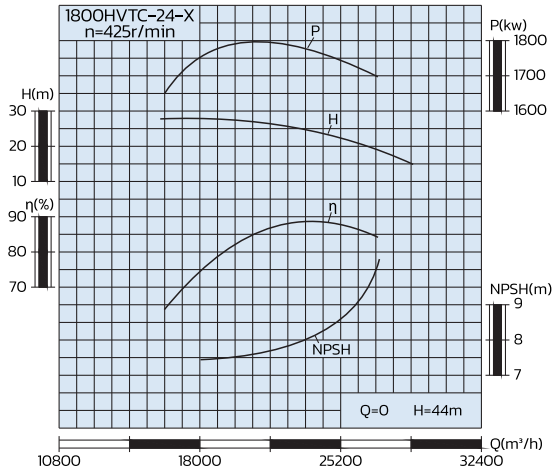

Performance Curve

HVT type pump performance curve drawing

HVT Type Performance Curve
(outlet diameter more than 600mm)

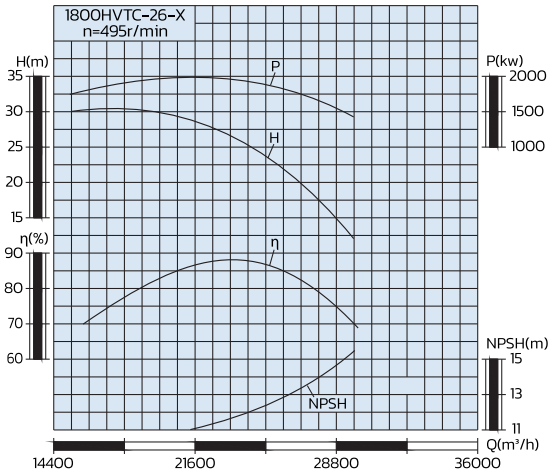

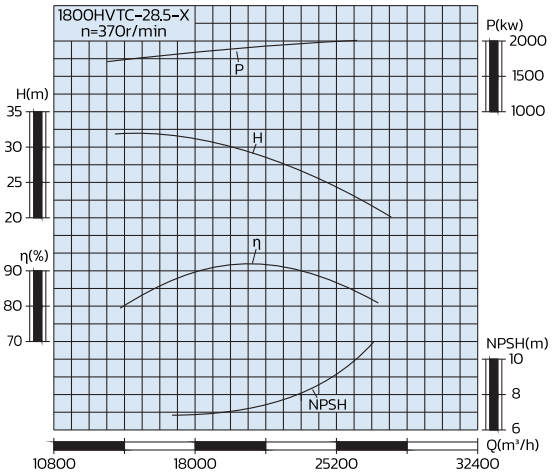

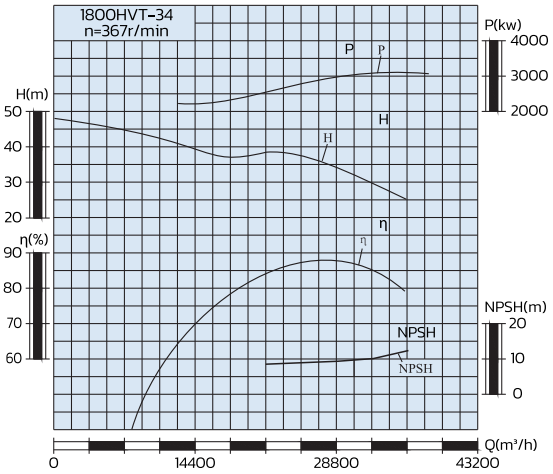



Performance Parameter
Model : HVT

No.	Pump type	Outlet diameter mm	Capacity m³/h	Head m	Speed r/min	Effciency %	Motor power kw
1	50HVT-10	50	15	10	2840	50	1.5
2	50HVT2-20			20	2870	50	3
3	50HVT3-30			30	2890	50	4
4	50HVT4-40			40	2890	50	5.5
5	50HVT5-50			50	2890	50	7.5
6	50HVT6-60			60	2900	50	11
7	50HVT7-70			70	2900	50	11
8	50HVT8-80			80	2930	50	11
9	50HVT9-90			90	2930	50	15
10	50HVT10-100			100	2930	50	15
11	65HVT-10	65	30	10	2840	55	2.2
12	65HVT2-20			20	2890	55	4
13	65HVT3-30			30	2890	55	7.5
14	65HVT4-40			40	2890	55	11
15	65HVT5-50			50	2890	55	11
16	65HVT6-60			60	2900	55	15
17	65HVT7-70			70	2900	55	15
18	65HVT8-80			80	2930	55	18.5
19	65HVT9-90			90	2930	55	18.5
20	65HVT10-100			100	2930	55	22
21	80HVT-15	80	50	15	2900	60	5.5
22	80HVT2-30			30	2900	60	11
23	80HVT3-45			45	2900	60	15
24	80HVT4-60			60	2930	60	22
25	80HVT5-75			75	2930	60	30
26	80HVT6-90			90	2950	60	30
27	80HVT7-105			105	2950	60	37
28	100HVT-15	100	80	15	2900	65	7.5
29	100HVT-30			30	2930	65	15
30	100HVT2-60			60	2930	65	30
31	100HVT3-90			90	2950	65	45
32	100HVT4-120			120	2950	65	55
33	150HVT-20	150	150	20	1460	73	15
34	150HVT2-30			30	1470	72	22
35	150HVT2-40			40	1470	73	30
36	150HVT3-60			60	1480	72	45
37	150HVT4-80			80	1480	72	55
38	150HVT5-100			100	1490	72	75
39	150HVT6-120			120	1490	72	90
40	200HVT-15	200	300	15	1470	75	22
41	200HVT-20			20	1470	75	30
42	200HVT2-30			30	1480	75	45
43	200HVT2-40			40	1480	75	55
44	200HVT3-65			65	1490	74	90
45	200HVT4-90			90	1490	73	110

Performance Parameter
Model : HVT

No.	Pump type	Outlet diameter mm	Capacity m³/h	Head m	Speed r/min	Effciency %	Motor power kw
46	250HVT-20	250	450	20	1480	76	45
47	250HVT2-30		450	30	1480	74	75
48	250HVT2-40		450	40	1480	76	90
49	250HVT2-50		450	50	1490	76	110
50	250HVT3-60		450	60	1490	75	132
51	250HVT3-75		450	75	1490	75	160
52	250HVT4-95		450	95	1490	74	200
53	300HVT-6	300	700	6	970	72	22
54	300HVT-8		700	8	980	72	30
55	300HVT-10		700	10	980	74	37
56	300HVT-15		650	15	1480	75	45
57	300HVT-20		650	20	1480	77	55
58	300HVT2-30		650	30	1490	76	90
59	300HVT2-40		650	40	1490	76	110
60	300HVT3-60		650	60	1490	75	185
61	300HVT4-80		650	80	1490	75	220
62	350HVT-4	350	1000	4	1470	74	22
63	350HVT-6		1000	6	1470	75	30
64	350HVT-8		1000	8	1470	75	37
65	350HVT-10		1000	10	1470	76	45
66	350HVT-15		900	15	1480	77	75
67	350HVT-20		900	20	1490	78	90
68	350HVT-30		900	30	1490	77	132
69	350HVT2-40		900	40	1490	78	160
70	350HVT3-60		900	60	1490	77	250
71	350HVT4-80		900	80	1490	77	315
72	350HVT4-120		900	120	1480	77	500
73	400HVT-4	400	1500	4	1470	75	30
74	400HVT-6		1500	6	1470	77	45
75	400HVT-8		1500	8	980	80	55
76	400HVT-10		1500	10	980	80	75
77	400HVT-12		1300	12	980	78	75
78	400HVT-16		1500	16	1480	78	110
79	400HVT-20		1250	20	1490	80	110
80	400HVT-25		1250	25	1490	80	132
81	400HVT-30		1250	30	1490	80	160
82	400HVT-35		1500	35	980	80	220
83	400HVT2-40		1250	40	1490	80	200
84	400HVT-50		1250	50	1490	80	280
85	400HVT2-60		1250	60	1490	80	315
86	400HVT2-70		1250	70	1480	80	355
87	500HVT-4	500	2200	4	980	82	37
88	500HVT-6		2200	6	980	81	55
89	500HVT-8		2300	8	980	81	75
90	500HVT-10		2200	10	980	82	90
91	500HVT-12		2200	12	980	84	110
92	500HVT-15		2200	15	980	85	132

Performance Parameter
Model : HVT

No.	Pump type	Outlet diameter mm	Capacity m³/h	Head m	Speed r/min	Effciency %	Motor power kw
93	500HVT-20	500	2300	20	980	83	200
94	500HVT-25		2200	25	980	84	220
95	500HVT-30		2200	30	980	83	280
96	500HVT-35		2200	35	980	83	315
97	500HVT-40		2200	40	980	83	355
98	500HVT3-100		2200	100	980	83	800
99	500HVT4-140		2200	140	983	83	1250
100	600HVT-4	600	3000	4	730	84	45
101	600HVT-6		3000	6	730	83	75
102	600HVT-8		3000	8	730	85	110
103	600HVT-10		3000	10	730	83	132
104	600HVT-12		3400	12	980	85	160
105	600HVT-15		3000	15	980	85	185
106	600HVT-20		3000	20	980	85	250
107	600HVT-25		3000	25	980	85	315
108	600HVT-30		4000	30	980	84	500
109	600HVT-35		4000	35	980	84	560
110	600HVT-40		3200	40	980	83	560
111	600HVTC-15		3200	15	980	83	200
112	600HVTC-15-X		3200	15	980	83	200
113	600HVTC-20		3000	20	980	83	250
114	600HVTC-20-X		3000	20	980	83	250
115	700HVT-4	700	4500	4	730	83.5	75
116	700HVT-6		4500	6	730	84.5	110
117	700HVT-8		4500	8	730	82.5	160
118	700HVT-10		4500	10	730	83.5	185
119	700HVT-12		4500	12	730	83.5	220
120	700HVT-15		4500	15	740	85.5	280
121	700HVT-20		4500	20	740	86.5	355
122	700HVT-25		4500	25	740	85	450
123	700HVT-30		4500	30	740	85	560
124	700HVTC-15		4500	15	740	84	280
125	700HVTC-15-X		4500	15	740	84	280
126	700HVTC-20		4500	20	740	85.5	355
127	700HVTC-20-X		4500	20	740	85.5	355
128	800HVT-4	800	6400	4	585	85.1	110
129	800HVT-6		6000	6	585	84.8	160
130	800HVT-8		6500	8	585	84.5	220
131	800HVT-10		6400	10	590	83.5	250
132	800HVT-12		6200	12	590	84.3	315
133	800HVT-15		7000	15	590	84.5	450
134	800HVT-20		6200	20	730	86.5	500
135	800HVT-25		6200	25	730	85	600
136	800HVT-7-X		6000	7	590	85	185
137	800HVT-13.4-X		6700	13.4	590	84.8	355

Performance Parameter
Model : HVT

No.	Pump type	Outlet diameter mm	Capacity m³/h	Head m	Speed r/min	Effciency %	Motor power kw
138	800HVT-17-X	800	6000	17	590	84.5	400
139	800HVTC-15		7000	15	590	84	450
140	800HVTC-15-X		7000	15	590	84	450
141	800HVTC-20		6200	20	730	85.5	500
142	800HVTC-20-X		6200	20	730	85.5	500
143	900HVT-4	900	8500	4	485	85.1	160
144	900HVT-6		8500	6	485	85.3	200
145	900HVT-8		8000	8	490	84.5	280
146	900HVT-10		8000	10	590	84.9	315
147	900HVT-14		8000	14	590	85.3	450
148	900HVT-16		8000	16	590	85.2	500
149	900HVT-20		8000	20	590	86.4	630
150	900HVT-25		8000	25	590	85	800
151	900HVT-7-X		8000	7	490	85.1	250
152	900HVT-12.6-X		9000	12.6	590	87	450
153	900HVT-17-X		8000	17	590	85.5	560
154	900HVTC-15		8000	15	590	84.5	500
155	900HVTC-15-X		8000	15	590	84.5	500
156	900HVTC-20		8000	20	590	85.5	630
157	900HVTC-20-X		8000	20	590	85.5	630
158	1000HVT-4	1000	9500	4	485	87	185
159	1000HVT-7		10500	7	485	87.1	315
160	1000HVT-9		10000	9	490	84.5	355
161	1000HVT-10		10000	10	490	85.2	400
162	1000HVT-13		10000	13	490	85.3	500
163	1000HVT-16		10000	16	490	85.6	630
164	1000HVT-18		10000	18	490	85.8	710
165	1000HVT-20		10000	20	490	86.4	800
166	1000HVT-7-X		10500	7	485	87.1	315
167	1000HVT-13-X		10000	13	490	85.3	500
168	1000HVT-17-X		10000	17	490	85.5	710
169	1000HVTC-15		9000	15	490	84.5	560
170	1000HVTC-15-X		9000	15	490	84.5	560
171	1000HVTC-20		9000	20	590	86	710
172	1000HVTC-20-X		9000	20	590	86	710
173	1200HVT-4	1200	13500	4	490	84.2	250
174	1200HVT-6		15000	6	490	87.4	355
175	1200HVT-9		14500	9	490	84.5	560
176	1200HVT-12		14500	12	490	85.2	710
177	1200HVT-14		14000	14	490	85.3	800
178	1200HVT-16		13000	16	490	86.6	800
179	1200HVT-18		15000	18	495	85.8	1000
180	1200HVT-20		16000	20	495	86.4	1250

Performance Parameter
Model : HVT

No.	Pump type	Outlet diameter mm	Capacity m³/h	Head m	Speed r/min	Effciency %	Motor power kw
181	1200HVT-24	1200	14000	24	495	87	1250
182	1200HVT-8-X		14400	8	490	85.4	450
183	1200HVT-10-X		14000	10	490	85.3	560
184	1200HVT-17-X		14000	17	490	86.5	900
185	1200HVTC-15		10000	15	490	84.5	630
186	1200HVTC-15-X		10000	15	490	84.5	630
187	1200HVTC-19		6732	19	590	88	500
188	1200HVTC-19-X		6732	19	590	88	500
189	1400HVTC-9	1400	10656	10.6	370	83	500
			12816	8.5		87	
			15228	5.8		82	
190	1400HVTCB-10(-4°)	1400	7596	10.6	370	85.6	315
			8856	8.6		88.7	
			9612	6.8		85.6	
191	1400HVTCB-10(-2°)	1400	8172	11.4	370	85.6	350
			9792	9.2		88.8	
			10800	7.2		85.6	
192	1400HVTCB-10(0°)	1400	8820	12.2	370	85.6	400
			10620	10		89.1	
			11880	7.7		85.6	
193	1400HVTCB-10(+2°)	1400	9432	12.8	370	85.6	450
			11412	10.7		89.6	
			12744	8.3		85.6	
194	1400HVTCB-10(+4°)	1400	10260	13.4	370	85.6	500
			12240	11.3		89.2	
			13500	9.3		85.6	
195	1400HVTCQ-10	1400	8856	8.5	370	88.7	500
			9792	9.2		88.8	
			10620	10		89.1	
			11412	10.7		89.6	
			12240	11.3		89.2	
196	1400HVT-14	1400	15300	18.7	370	84.5	1000
			18000	14.2		89	
			21096	8.9		79	
197	1400HVT-60	1400	12600	66	495	82	3600
			16200	60		86	
			19800	49.5		82	
198	1400HVT-60A	1400	11700	57.5	495	80	3150
			15300	51.7		85	
			18000	44.5		82	
199	1400HVT-60B	1400	12600	47.5	495	81	2500
			14400	44.5		83	
			16200	40		81	

Performance Parameter
Model : HVT

No.	Pump type	Outlet diameter mm	Capacity m³/h	Head m	Speed r/min	Effciency %	Motor power kw
200	1400HVT-10	1400	18000	12.7	370	83	900
			23400	9.7		88.4	
			27720	3.5		79	
201	1500HVTC-26-X	1500	13680	29.2	495	82	1600
			16128	26.3		88.5	
			19080	20		86	
202	1500HVTC-26A-X	1500	13428	25	495	85	1250
			16200	21		88	
			18612	15.5		81.5	
203	1500HVTC-26B-X	1500	12960	22.4	495	82	1250
			15480	19.8		87	
			17280	15.8		83	
204	1600HVTC-6-X	1600	18000	9.4	495	86	630
			20700	6.8		87.5	
			22500	5		83	
205	1600HVTCQ-8	1600	13320	6	333	86	600
			14400	7		87	
			15300	8.1		88	
			16200	8.85		88	
			17640	8.9		87	
206	1600HVTCQ-10-X	1600	15552	8.38	370	86.5	900
			18252	9.55		88.4	
			23328	9.35		87	
207	1600HVTC-11(-4°)	1600	15480	11.9	370	82.5	800
			17640	9.5		85.5	
			19400	7.1		83.5	
208	1600HVTC-11(-2°)	1600	16560	12.9	370	83	800
			19800	9.9		87.3	
			21600	7.7		83	
209	1600HVTC-11(0°)	1600	18000	13.8	370	81.7	1000
			21600	10.9		88.7	
			24480	7.5		83	
210	1600HVTC-11(+2°)	1600	19440	14.6	370	83	1000
			22896	12		88.7	
			26280	8.1		83	
211	1600HVTC-11(+4°)	1600	21960	14.1	370	83.4	1250
			24480	12.3		87.7	
			27360	9.35		83	
212	1600HVTC-14	1600	11200	15.7	370	86.5	600
			12024	14.6		88.8	
			12600	13		85.2	
213	1600HVT-7	1600	20304	8.79	295	87.8	630
			22680	7.18		88.8	
			25560	4.15		82.3	

Performance Parameter
Model : HVT

No.	Pump type	Outlet diameter mm	Capacity m³/h	Head m	Speed r/min	Effciency %	Motor power kw
214	1600HVT-12	1600	18252	16	333	87	1000
			22680	11.6		88.6	
			23400	10.3		87	
215	1600HVT-13.5	1600	18540	17.2	333	85.5	1250
			22680	13.5		88	
			24696	10.8		87	
216	1600HVT-14.6	1600	18000	19.4	375	85.5	1250
			22680	14.65		88.8	
			24120	11.84		83	
217	1600HVT-20	1600	19080	22	375	84	1600
			22680	19.57		89	
			26280	15.2		87	
218	1600HVTB-16(-6°)	1600	16920	14.1	330	81.8	1000
			18360	12.8		83	
			20880	8.9		80.3	
219	1600HVTB-16(-4°)	1600	18360	16	330	83.4	1250
			20880	13.8		85.3	
			23400	10.3		83.4	
220	1600HVTB-16(-2°)	1600	20160	17.3	330	82.4	1600
			23400	14.5		85.3	
			24840	12.9		84.7	
221	1600HVTB-16(0°)	1600	22320	17.9	330	83.5	1600
			24480	16.1		85.7	
			27360	13.5		85.3	
222	1600HVTB-16(+2°)	1600	25200	19.4	330	85	2000 (dual speed) 1000 (Motor)
			27000	18		86	
			28800	16.4		85	
			18000	11	246	84	
			19800	10.2		86	
			21600	9		85	
223	1600HVTB-16(+4°)	1600	27360	19.1	330	86.1	2000
			29880	17.2		86.9	
			31680	15.4		86.1	
224	1600HVT-19	1600	26100	21	330	82	2000 (dual speed) 1000 (Motor)
			30600	18.75		86	
			33300	15.4		83	
			19800	11.6	246	82	
			22500	10.5		86	
			24300	9.1		83	
225	1600HVTB-15.5(-4°)	1600	21600	18.3	295	82	1600
			28800	13.8		88	
			33300	8.8		80	
226	1600HVTB-15.5(-2°)	1600	36576	9.2	295	81.7	2000
			31176	14.6		88	
			25236	18.2		81.7	

Performance Parameter
Model : HVT

No.	Pump type	Outlet diameter mm	Capacity m³/h	Head m	Speed r/min	Effciency %	Motor power kw
227	1600HVTB-15.5(0°)	1600	37476	10.6	295	83	2000
			33948	15.8		87	
			29628	18.6		85	
228	1600HVTB-15.5(+2°)	1600	41796	11	295	78.8	2500
			36000	17.6		87	
			31356	20.2		85	
229	1600HVTB-15.5(+4°)	1600	42696	13.2	295	83	2500
			38340	18.4		86.8	
			34848	20.2		85	
230	1600HVTC-40	1600	12600	46.4	585	84.1	2500
			15300	41.9		86.9	
			16200	40		86.8	
231	1800HVTCQ-16	1800	18000	13.6	370	86	1600
			19800	14.8		87	
			21600	16		88	
			23400	17		88	
			25200	18.3		88	
232	1800HVTC-17	1800	18000	19.2	370	85	1250
			20340	17.3		88	
			23760	12.7		81	
233	1800HVTC-21	1800	17460	23	370	80	1600
			21672	21		89	
			28728	13		80	
234	1800HVTC-24-X	1800	19944	27.8	425	84.2	2000
			23760	24		87.8	
			27072	19.5		84.3	
235	1800HVTC-26-X	1800	21600	28.6	495	86.3	2500
			23760	26.1		87.5	
			25920	22.2		84.3	
236	1800HVTC-28.5-X	1800	18000	31.3	370	84.2	2500
			21600	28.5		87	
			26100	23.2		81	
237	1800HVT-34	1800	23400	37.4	370	85.1	3600
			28800	33.8		88	
			34200	27.2		81.9	
238	1800HVT-34A	1800	21024	32.6	370	85	3200
			27252	29		88	
			31788	24.5		82	
239	2000HVTC-20-X	2000	16812	14.9	370	88	1600
			20484	19.8		88	
			25992	11.2		84	
240	2000HVTC-24-X	2000	19944	27.8	370	84.2	2200
			23760	24		87.8	
			27072	19.5		87.3	
241	2200HVTC-27.5-X	2200	25200	30.5	370	86.1	3000
			29016	27.5		89	
			34560	21		81	
242	2400HVTC-24-X	2400	30960	25	300	86	3200
			36000	23.6		88	
			41400	18.7		83	



FRONTLINE ENGINEERING PCL.

บริษัท ฟร้อนท์ไลน์ เอ็นจิเนียริ่ง จำกัด (มหาชน)

Contact :

+662-960-1145

Sales@front-line.co.th

WWW.FRONT-LINE.CO.TH

409 Bond Street Road, Bang Phut Subdistrict,
Pak Kret District, Nonthaburi, 11120

Authorised / Distributor